Unified Patent Court
Einheitliches Patentgericht
Juridiction unifiée du brevet

UPC Court of Appeal
UPC-CoA-885/2025

DECISION

of the Court of Appeal of the Unified Patent Court
Issued on 20 November 2026

APPELLANT (AND CLAIMANT BEFORE THE COURT OF FIRST INSTANCE)

[redacted]

(hereinafter referred to as: "**Appellant**")

represented by Dr. Jasper Carl Werhahn, Meissner Bolte Patentanwälte Rechtsanwälte Partnerschaft mbB, Munich, Germany

RESPONDENT (AND DEFENDANT BEFORE THE COURT OF FIRST INSTANCE)

Essetre Holding SpA, Via della Repubblica Serenissima 7, 36016 Thiene (VI), Italy

(hereinafter referred to as: "**Respondent**")

represented by Dr. Tobias J. Hessel, Clifford Chance Partnerschaft mbB, Düsseldorf, Germany and Giorgio Alessandro Karaghiosoff, Praxi Intellectual Property S.p.A, Genova, Italy

PATENT AT ISSUE

EP 2 875 923

LANGUAGE OF THE PROCEEDINGS

English

PANEL AND DECIDING JUDGES

Panel 3:
Ulrike Voß, presiding judge
Bart van den Broek, legally qualified judge and judge-rapporteur
Nathalie Sabotier, legally qualified judge
Nicolai Geier, technically qualified judge
Bernard Ledeboer, technically qualified judge

IMPUGNED DECISION OF THE COURT OF FIRST INSTANCE

- Decision of the Central Division Paris, dated 28 July 2025, in the revocation action UPC-CFI-239/2024

ORAL HEARING

4 November 2026

FACTS AND REQUESTS OF THE PARTIES

The patent at issue

1. Respondent is the proprietor of the patent at issue ("**patent**"). The patent is entitled "*Machine for machining walls, particularly walls made of wood or multilayer walls and the like*" and is based on European patent application 14191290.7, filed on 31 October 2014. The patent claims priority to IT PD20130316, filed on 20 November 2013. The mention of the grant of the patent was published on 17 August 2016. No opposition was filed against the patent.

2. Claim 1 is the only independent claim of the patent and reads as follows:

   Claim 1

   A machine (10) for machining walls, particularly for walls made of wood or multilayer walls and the like, comprising a portal (11) with one or more working heads (12), and a working surface (13) for resting a wall (14) to be machined, said portal (11) and said working surface (13) being configured for the movement of one with respect to the other, said machine for machining walls being ***characterized in that*** *said working surface (13) comprises a first and second opposite support and movement frames (17, 18), both provided with means for translation and rotation (19, 20) with respect to a fixed base frame (21) and configured so as to allow each support and movement frame (17, 18) to provide the following configurations:*
   - *a lowered substantially horizontal configuration for machining a wall (14),*
   - *an inclined configuration that faces the other opposite support and movement frame (17, 18) for turning over a wall (14) supported by said first support and movement frame (17) onto said second opposite support and movement frame (18).*

3. In these proceedings, Respondent defends claim 1 according to a principal request that was filed with the Defence to revocation and Application to amend the patent dated 7 August 2024 ("**Defence"**). Claim 1 of the principal request reads as follows (additions marked in red):

   Claim 1 (principal request)

   A machine (10) for machining walls, particularly for walls made of wood or multilayer walls and the like, comprising a portal (11) with one or more working heads (12), and a working surface (13) for resting a wall (14) to be machined, said portal (11) and said working surface (13) being configured for the movement of one with respect to the other said machine for machining walls being ***characterized in that*** *said working surface (13) comprises a first and second opposite support and movement frames (17, 18), both provided with means for translation and rotation (19, 20) with respect to a fixed base frame (21) and configured so as to allow each support and movement frame (17, 18) to provide the following configurations:*
   - *a lowered substantially horizontal configuration for machining a wall (14),*
   - *an inclined configuration that faces the other opposite support and movement frame (17, 18) for turning over a wall (14) supported by said first support and movement frame (17) onto said second opposite support and movement frame (18),*

   by a lateral retraction of the said support and movement frames relatively to the said fixed base frame (21) and simultaneous rotation of the said support and movement frames (17, 18).

4. The principal request filed with the Defence also contained dependent claims 2-10. The text of these claims is the same as in the patent.

The procedural background and the impugned decision

5. On 17 May 2024, Appellant lodged a revocation action against the patent before the Central Division Paris ("**CD Paris**"). In the Statement for revocation, Appellant requested the CD Paris to revoke the patent to the extent of claims 1, 3, 4, 5, 6, 9 and 10. Appellant specifically noted that dependent claims 2, 7 and 8 were not subject of the revocation action.

6. With its Defence, Respondent filed the principal request referred to above and auxiliary requests 1 to 5. Auxiliary request 3 was subsequently withdrawn in the Rejoinder to the Reply to the Defence to revocation and Reply to the Defence to the Application to amend the patent dated 6 November 2024 ("**Rejoinder**").

7. According to Appellant, claim 1 of the principal request is invalid for lack of clarity and added matter. In addition, claim 1 would be anticipated by DE 34 12 441 C2 ("**MB1**") in view of the YouTube video MB6 ("**MB6**") and by the YouTube video MB7 ("**MB7**"). Furthermore, claim 1 would lack an inventive step, *inter alia*, in view of MB1 in combination with the common general knowledge, MB6, MB7, DE 298 03 473 U1 ("**MB2**") or the YouTube video MB8 ("**MB8**").

8. In its submissions in first instance, Respondent did not challenge the public availability of MB6, MB7 and MB8 before the priority date of the patent, but contested that claim 1 would be invalid in view of these videos and the other prior art references cited by Appellant.

9. In its decision of 28 July 2025 ("**impugned decision**"), the CD Paris rejected the invalidity arguments raised by Appellant. According to the CD Paris, claim 1 is clear and does not add matter. Furthermore, the CD Paris decided that none of the prior art references cited by Appellant could take away the novelty or inventive step of the claimed invention.

10. In paragraph 71 of the impugned decision, the CD Paris concluded that the patent would be maintained according to the principal request. Instead of quoting claim 1 (*et seq*.) of the principal request, the CD Paris quoted in paragraph 71 claim 1 (*et seq.*) of auxiliary request 1. On 16 February 2026, Respondent notified the CD Paris of this error and asked the CD Paris to use its discretionary power to rectify this "obvious slip" in accordance with R. 353 RoP. Thus far, the CD Paris has not rectified paragraph 71 of the impugned decision.

11. On 26 September 2025, Appellant lodged its Statement of appeal against the impugned decision, followed by lodging the Statement of grounds of appeal ("**Grounds of Appeal**") on 28 November 2025. On 27 February 2026, Respondent filed its Statement of response.

The requests of the parties

12. In the Statement of appeal, Appellant requests the Court of Appeal to set aside the impugned decision and to revoke the patent in its entirety.

13. In its Statement of response, Respondent requests that:

    I. the Court of Appeal rejects the appeal of the Appellant;

    II. the Appellant bears the costs of the appeal proceedings.

14. As an auxiliary request, in case the CD Paris would not rectify the impugned decision as requested by Respondent pursuant to R. 353 RoP, Respondent requests:

    III. the Court of Appeal to exercise its discretion to rectify recital 71 of the impugned decision to read as follows:

"*Therefore, the patent EP '923 shall be maintained in the amended version (Principal Request), which reads as follows:*

"1. A machine (10) for machining walls, particularly for walls made of wood or multilayer walls and the like, comprising a portal (11) with one or more working heads (12), and a working surface (13) for resting a wall (14) to be machined, said portal (11) and aid working surface (13) being configured for the movement of one with respect to the other, said machine for machining walls being characterized in that said working surface (13) comprises a first and second opposite support and movement frames (17, 18), both provided with means for translation and rotation (19, 20) with respect to a fixed base frame (21) and configured so as to allow each support and movement frame (17, 18) to provide the following configurations:

- a lowered substantially horizontal configuration for machining a wall (14),

- an inclined configuration that faces the other opposite support and movement frame (17, 18) for turning over a wall (14) supported by said first support and movement frame (17) onto said second opposite support and movement frame (18),

- ***by a lateral retraction of the said support and movement frames relatively to the said fixed base frame (21) and simultaneous rotation of the said support and movement frames (17, 18)****."""*

SUMMARY OF THE PARTIES' SUBMISSIONS AND THE ORDER OF THE COURT

15. Appellant argues that the CD Paris was incorrect to uphold claim 1 *et seq*. of the principal request. In particular, Appellant argues that the CD Paris failed to recognize that claim 1 violates Art. 84 EPC, as the meaning and scope of the terms "simultaneous" and "lateral retraction" in the passage added to claim 1 in the principal request (feature 1.6.3) are unclear. It would also be unclear how feature 1.6.3 relates to the other measures of feature group 1.6. Furthermore, according to Appellant, the CD Paris failed to recognize that claim 1 adds matter, as the passage in the application from which feature 1.6.3 is derived, does not disclose the lateral retraction of the frames to be relative to a fixed base frame and does not provide basis for the term "simultaneous" in feature 1.6.3. In addition, according to Appellant, that passage is part of an exemplary embodiment and Respondent failed to include a number of elements from this example in the claim, which are inextricably linked to the added feature 1.6.3. This would constitute an unallowed intermediate generalization. Finally, according to Appellant, the CD Paris was incorrect to accept novelty and inventive step of the claimed invention.

16. Respondent argues that the CD Paris was correct to uphold the claims of the principal request. First, Respondent argues that feature 1.6.3 is clear and does not add matter. The CD Paris correctly decided that the term "lateral retraction" means retraction perpendicular to the longitudinal axis and that the term "simultaneous" in feature 1.6.3 means that the lateral retraction and the rotation of the frames occur at the same time. According to Respondent, the CD Paris also correctly decided that the relation between feature 1.6.3 and the other measures of feature group 1.6 is clear, as feature 1.6.3 describes the movement from the first (horizontal) configuration of the frames to the second (inclined) configuration described in features 1.6.1 and 1.6.2. In addition, Respondent argues that the CD Paris correctly held that there is no added matter, as the application discloses that the lateral retraction takes place relatively to the fixed base frame. Furthermore, the application discloses that the lateral retraction and the rotation of the frames may occur "at the same time", which is synonymous to the term "simultaneous" used in feature 1.6.3. The CD Paris also correctly held that there is no unallowed intermediate generalization. Finally, according to Respondent, the CD Paris was correct to confirm the novelty and inventive step of the claimed invention, as a number of features of claim 1 are missing in the cited prior art.

17. In addition to these substantive points, Respondent raises two formal issues. First, Respondent notes that in this appeal, Appellant requests the revocation of the patent *in its entirety*. According to

Respondent this would constitute an extension of the claim, as the action for revocation would now also include claims 2, 7 and 8 of the patent, whereas these claims were excluded from the revocation action in first instance. Respondent asks the Court of Appeal to declare this extension inadmissible pursuant to R. 222.2 RoP. Secondly, as indicated above, Respondent notes that the CD Paris erroneously quoted the text of auxiliary request 1 in paragraph 71 of the impugned decision and asks the Court of Appeal to rectify this obvious slip in accordance with R. 353 RoP in conjunction with R. 242.2(a) RoP, in case the CD Paris would fail to do so.

18. In the order of 28 October 2026 ("**Order**"), the Court of Appeal asked the parties to clarify during the oral hearing their position in relation to claims 2, 7 and 8, in particular regarding the inclusion of these claims in the revocation action and in the principal request.

GROUNDS FOR THE DECISION

19. Appellant's appeal against the impugned decision is admissible but unfounded.

I. Formal issues

Claims 2, 7 and 8 of the patent

20. In response to Respondent's objection based on R. 222.2 RoP and the Order of this Court, Appellant clarified during the oral hearing that it did not mean to extend its claim for revocation in this appeal to also cover claims 2, 7 and 8 of the patent and confirmed that the revocation action is still limited to claims 1, 3, 4, 5, 6, 9 and 10. In view of this confirmation, the Court of Appeal does not have to deal with Respondent's objection based on R. 222.2 RoP.

21. In reaction to the Order and Appellant's confirmation, Respondent requested the Court during the oral hearing to be allowed to withdraw claims 2, 7 and 8 from its principal request as these claims are not part of the revocation action. In response, Appellant indicated that it had no objection against such withdrawal. In view thereof, the Court of Appeal allows the withdrawal of claims 2, 7 and 8 from the principal request. The principal request without claims 2, 7 and 8 is referred to in this decision as the "**Principal Request**".[1]

Request to rectify paragraph 71 of the impugned decision

22. In the operative part of this decision the Court of Appeal will include the text of the claims which are to be upheld. Therefore, leaving aside the question whether the Court of Appeal can rectify a decision of the Court of First Instance pursuant to R. 353 RoP (which still needs to be decided upon by that Court), there is no need for the Court of Appeal to rectify paragraph 71 of the impugned decision.

II. The patent at issue

23. The subject-matter of the patent relates to a machine for machining prefabricated walls (par. [0001]).

24. Paragraphs [0002]–[0011] of the patent description set out the background of the invention. It is explained in these paragraphs that in the field of prefabricated structures for the construction of buildings, prefabricated walls are used that may be constituted by one or more superimposed layers of wooden material. For the machining of such walls, mobile portals are used, which are equipped with a milling head and are arranged to slide on adapted sliding guides with respect to the working surface of the machine (paras. [0002]–[0005]).

25. The walls need to be machined on both sides. The patent describes that for this purpose one or two auxiliary lateral carriages are used for overturning the wall being machined (paras. [0007–0009]). According to the patent, the auxiliary carriages move on guide rails that are cheaply made with drawn iron plates, which results in sliding and low speeds owing to the slipping of the wheels of the carriages

[1] Unless indicated otherwise, references in this decision to claim 1 *et seq*. of the patent refer to the claims of the Principal Request.

on the iron plates. Furthermore, the guide rails would intersect by superimposition, thus making it impossible for one of the two carriages to continue the stroke in its direction of motion, with consequent limitations on the management of the panels being machined (paras. [0010]–[0011]).

26. The aim of the claimed invention is to provide a machine for machining walls, which overcomes the limitations of these conventional machines. Within this aim, an object of the invention is to devise a machine for machining walls with no auxiliary lateral carriages for overturning a wall being machined. Another object of the invention is to devise a machine that is more compact overall by doing without the lateral encumbrances of the auxiliary carriages for turning over the wall being machined. A further object of the invention is thus to devise a machine for machining walls which is faster and more precise compared to conventional machines (paras. [0012]–[0015]).

27. Claim 1 protects a machine for manufacturing walls aimed at achieving these objectives. The parties and the CD Paris referred to the separate features of claim 1 as follows, to which the Court of Appeal agrees:

Feature 1.0:	A machine (10) for machining walls, particularly for walls made of wood or multilayer walls and the like, comprising
Feature 1.1:	a portal (11) with one or more working heads (12), and
Feature 1.2:	a working surface (13) for resting a wall (14) to be machined
Feature 1.3:	said portal (11) and said working surface (13) being configured for the movement of one with respect to the other
Feature 1.4:	said machine for machining walls being characterized in that said working surface (13) comprises a first and second opposite support and movement frames (17, 18)
Feature 1.5:	both provided with means for translation and rotation (19, 20) with respect to a fixed base frame (21)
Feature 1.6:	and configured so as to allow each support and movement frame (17, 18) to provide the following configurations
Feature 1.6.1:	- a lowered substantially horizontal configuration for machining a wall (14)
Feature 1.6.2:	- an inclined configuration that faces the other opposite support and movement frame (17, 18) for turning over a wall (14) supported by said first support and movement frame (17) onto said second opposite support and movement frame (18)
Feature 1.6.3:	by a lateral retraction of the said support and movement frames relatively to the said fixed base frame (21) and simultaneous rotation of the said support and movement frames (17, 18)

III. Skilled person

28. The CD Paris defined the skilled person as a mechanical engineer with a university degree in mechanical engineering with a specialization in mechanical design, having several years of professional experience in the construction of machine tools and a high level of expertise in the fields of mechanics, electrics, pneumatics and hydraulics. This definition was proposed by Appellant in the Statement for revocation and Respondent agrees with it. The Court of Appeal also agrees with this definition and will apply it in this decision.

IV. Claim construction

29. The principles applicable to claim construction have been set out by this Court in its final order in UPC-CoA-335/2023 (26 February 2024, NanoString v 10x Genomics, as rectified; see also e.g. UPC-CoA-1/2024, 13 May 2024, VusionGroup v Hanshow; UPC-CoA-768/2024, 30 April 2025, Insulet v EOFlow).

30. A patent claim is not only the starting point but the decisive basis for determining the protective scope of a European patent under Art. 69 EPC in conjunction with the Protocol on the Interpretation of Art. 69 EPC. The interpretation of a patent claim does not depend solely on the strict, literal meaning of the wording used. Rather the description and the drawings must always be used as explanatory aids for the interpretation of the patent claim and not only to resolve any ambiguities in the patent claim. A patent claim must always be interpreted from the perspective of a person skilled in the art. The skilled person interprets the features of a claim always in the light of the claims as a whole. In applying these principles, the aim is to combine adequate protection for the patent holder with sufficient legal certainty for third parties (UPC-CoA-1/2024, 13 May 2024, VusionGroup v Hanshow; UPC-CoA-768/2024, 30 April 2025, Insulet v EOFlow; UPC-CoA-646/2024, 25 November 2025, Meril v Edwards; UPC-CoA-898/2025, 27 March 2026, ONWARD v Niche; UPC-CoA-901/2025, 17.April 2026, Abbott v Sinocare; UPC-CoA-36/2026, 8 July 2026, Angelalign v Align; UPC-CoA-919 and 920/2025, 16 September 2026, Heraeus v Vibrantz).

31. These principles for interpreting a patent claim apply both to the question of patent infringement and to the question of validity (e.g. NanoString v 10x Genomics and Abbott v Sinocare).

32. There is dispute between the parties on the interpretation of a number of features of claim 1. These features are discussed below.

Features 1.0 – 1.3

33. According to feature 1.0, claim 1 is directed to a machine for machining walls. Such walls are particularly made of wood or a multilayer construction. The machine according to claim 1 comprises a portal with one or more working heads (feature 1.1) and a working surface for resting the wall to be machined (feature 1.2). According to feature 1.3, the portal and the working surface are configured such that they can be moved relative to one another. By using the word “comprising” in feature 1.0, the claim makes clear that the claimed machine is not limited to the components mentioned in the claim.

34. The working surface is characterized by features 1.2 and 1.3 as the surface on which the wall to be processed can be machined by the working heads of the portal. The wall to be machined is to be placed on the working surface so that the portal's working heads can be used for machining the wall. The working surface therefore refers to the surface of the machine on which the wall to be machined rests and not to the underside of the machine or of any component of the machine. Furthermore, the relation between features 1.2 and 1.3 makes clear that the working surface and the portal are two associated components of the machine that interact with each other. The working surface of the claim should thus be distinguished from other surfaces that are merely intended for depositing the wall and on which the wall cannot be machined by the portal and its working heads. This understanding is confirmed by the introductory part of the patent description, which differentiates between working surfaces on which the walls are machined and auxiliary lateral carriages on which the walls are merely placed and moved (par. [0008] *et seq*.).

35. The parties are in dispute about the meaning of the words “a working surface” in feature 1.2. According to Respondent, the word “a” must be interpreted as “one”, thus excluding more than one working surface from the scope of claim 1. The CD Paris agreed with this interpretation. On the other hand, Appellant argues that the word “a” is indefinite and should be interpretated as at least one, leaving open the possibility that the machine has more than one working surface. The Court of Appeal agrees with Appellant.

36. When reading claim 1 on its face, there is no indication that the claimed machine may only contain a single working surface. Instead of using the specific term “one”, such as in feature 1.1, feature 1.2 uses the more open-ended word “a”. Although the Court of Appeal agrees with Respondent that there may be situations in which the word “a” has the meaning of “one”, in the context of the claim the word “a” is generally used and is not limited to “one”. Respondent’s argument that in Appellant’s interpretation of feature 1.2 (at least one), the word “a” in feature 1.2 has the same meaning as “one or more” in feature 1.1, cannot alter this. Nothing precludes the use of different terms in a claim having a similar meaning. Also the use of the singular form for the working surface in feature 1.4 (“said working surface”) does not support Respondent’s limitation to “one”. By using the word “said”, feature 1.4 makes clear that it refers back to the working surface of feature 1.2. This does not mean that this working surface is necessarily the only working surface in the machine. The claim does not exclude the use of a second (or further) working surface, either having the features of the claim or having a different configuration (as long as the machine does contain at least one working surface according to the claim).

37. The patent description confirms the broad meaning of the word “a” in feature 1.2. There is no teaching in the patent explaining that (or why) it would be mandatory for the claimed machine to only have a single working surface, excluding the use of more than one working surface. Such teaching can neither be derived from the cited prior art in paragraph [0001] nor from the discussion of conventional machines in paragraphs [0008] and [0009], as Respondent argues. Those paragraphs do not distinguish between machines with one or more working surfaces and do not suggest using only one working surface in the machine according to the invention. The same applies to paragraphs [0012]–[0015]. These paragraphs do not mention the use of only one working surface as an object of the invention, but rather the provision of a machine that operates without auxiliary lateral carriages (cf. paragraphs [0008] and [0009]).

38. Respondent’s reference to the exemplary embodiment and the use in this context of the singular form when discussing the working surface (cf. paragraphs [0019] and [0020]) cannot result in the proposed narrow reading either. As this Court held on multiple occasions, exemplary embodiments are generally included in the patent description to explain and clarify the claimed invention, not to limit the claim to the specifics of the described embodiment (UPC-CoA-335/2023, 26 February 2024, NanoString v 10x Genomics; UPC-CoA-1/2024, 13 May 2024, Vusion-Group v Hanshow; UPC-CoA-523/2024, 3 March 2025, Sumi Agro Europe v Syngenta; UPC-CoA-899/2025, 30 March 2026, Sinocare v Abbott). Also in this case, the fact that the exemplary machine is equipped with only one working surface does not mean that feature 1.2 is limited to such embodiment.

Feature 1.4

39. According to feature 1.4, the working surface of feature 1.2 (“said working surface”) comprises first and second support and movement frames. The frame elements of feature 1.4 are therefore part of the working surface for machining a wall (feature 1.2) using the portal associated with the working surface (feature 1.3). This is confirmed by features 1.6 and 1.6.1 which specify that each support and movement frame must be allowed to provide a substantially horizontal configuration “for machining a wall”. In addition, according to the wording of feature 1.4, the two frames must be suitable for supporting and moving the wall to be processed.

40. Feature 1.4 further requires that the first and second support and movement frames are arranged “opposite” one another. The claim does not define the specific arrangement of the opposite support and movement frames. In the exemplary embodiment, two substantially comb-shaped frames 17, 18 are arranged opposite one another by interlocking the frames in their resting position. This arrangement is recited in claim 2 and is shown in Figure 1 of the patent:

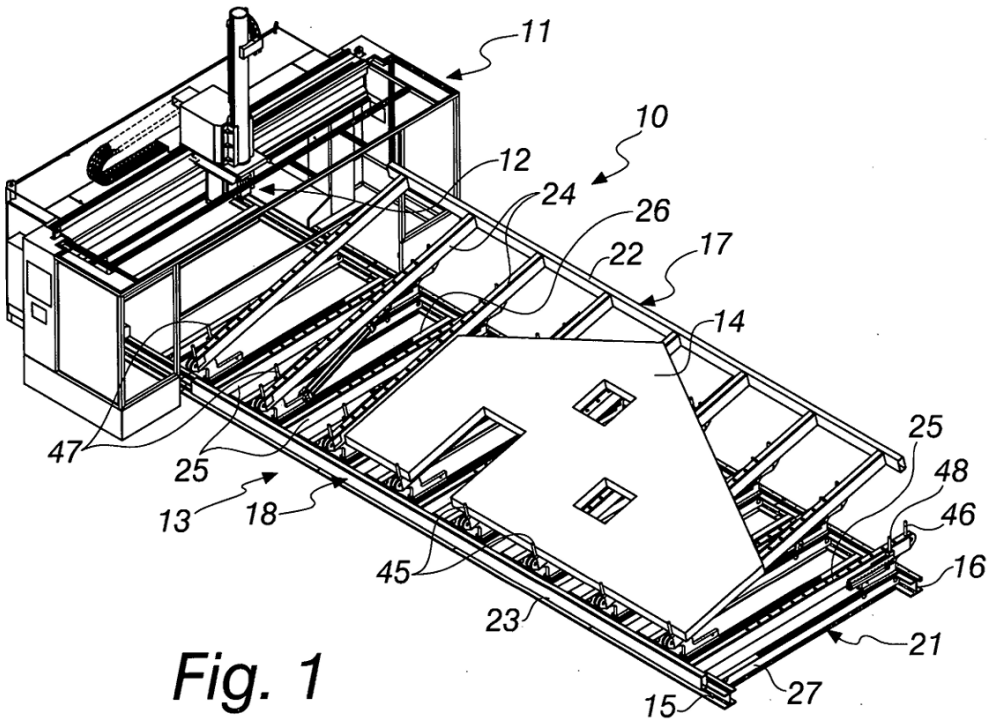

Fig. 1

41. Claim 1 is not limited to this arrangement and leaves open the possibility that the two opposite frames are arranged differently, for example, sideways or lengthwise. On the other hand, the term "opposite" is subject to certain restrictions when reading the claim as a whole. Firstly, the opposite arrangement of the two frame elements must be such that the wall resting on the frames is machinable by the working heads of the associated portal in accordance with feature 1.3. Secondly, the two opposite frames must be able to provide the configurations and movements of feature group 1.6, so that the wall can be turned from one frame to the other without having to use a lateral auxiliary carriage as in the prior art.

Feature 1.5

42. Both support and movement frames of the working surface are equipped with means for translation and rotation. According to feature 1.5, the point of reference for the specific movements of the two frames is a fixed base frame (cf. also feature 1.6.3). The structural configuration of the fixed base station is left open in the claim. Contrary to Appellant's position, it is clear, however, that the fixed base frame forms part of the machine of claim 1. This follows from the overall structure of the claim, which describes the various components of the machine and their mutual relationship. This reading is confirmed in the patent description, wherein the fixed base frame is consistently described as part of the machine according to the invention (see e.g. par. [0026] *et seq*.; see also Figures 1-11). The claimed machine must therefore have at least three frames, i.e. two opposite frame elements of the working surface (feature 1.4) and a fixed base frame (feature 1.5).

43. Also with respect to feature 1.5, Respondent argues that the word "a" implies that the claimed machine can only have a single ("one") base frame. For similar reasons as with respect to the working surface of feature 1.2, the Court of Appeal disagrees. There is no indication in either the claim or the patent description that the machine of claim 1 is limited to having a single base frame. For example, in case the machine is equipped with more than one working surface, the machine may also have more than one fixed base frame serving as a reference point for the frames of the additional working surface(s).

44. Feature 1.5 does not contain a limitation regarding the direction of the translational and rotational movements of the frames. The Court of Appeal therefore disagrees with the CD Paris that the claim would require a rotational movement along a "longitudinal" rotation axis and a translational movement "from side to side, i.e. essentially perpendicular relative to that longitudinal rotation axis"

(impugned decision, paragraph 29). According to their plain meaning, the word “translation” is understood by the skilled person to mean a movement without rotation, and the word “rotation” is understood as a movement about an axis. The claim only additionally requires that the means for translation and rotation are configured so as to allow the configurations and movements of the frames according to feature group 1.6, as will be discussed below.

Features 1.6 – 1.6.3

45. Feature group 1.6 describes the mechanism of using the frames of the working surface for machining the wall and for turning over the machined wall from one frame element onto the other. The means for translation and rotation of feature 1.5 are used for implementing and operating this mechanism. The Court of Appeal rejects Appellant’s argument that the words “configured so as to” in feature 1.6 could also relate to the two frames of feature 1.4 rather than to the means for translation and rotation of feature 1.5. It is clear from the wording and structure of the claim that the means for translation and rotation of feature 1.5 are responsible for the configuration of the frames according to feature 1.6.1 (“lowered substantially horizontal configuration”) and feature 1.6.2 (“inclined configuration”) and for the movements of lateral retraction (translation) and simultaneous rotation (rotation) described in feature 1.6.3 to move the frames from their horizontal position (feature 1.6.1) to their inclined position (feature 1.6.2).

46. This is confirmed in the patent description, which specifies in paragraph [0022] that the means for translation and rotation are responsible for providing the horizontal and inclined configurations of the frames according to features 1.6.1 and 1.6.2. Subsequently, paragraphs [0040] and [0041] describe how these means are used to provide the movements of the frames as described in feature 1.6.3 (cf. also par. [0046]).

47. Hence, there is no doubt to a skilled person that the means for translation and rotation of feature 1.5 are to be configured to provide the configurations and movements of the support and movement frames specified in features 1.6.1–1.6.3 as set out below*:*

    (a) According to feature 1.6.1, the two support and movement frames assume a lowered substantially horizontal position that is suitable for machining the wall to be processed by the portal and the machining heads provided thereon. Such a lowered configuration of the support and movement frames 17, 18 is illustrated, for example, in Figure 7, in which the support and movement frames 17, 18 are interlocked and jointly support the wall 14 resting thereon (cf. par. [0039]):

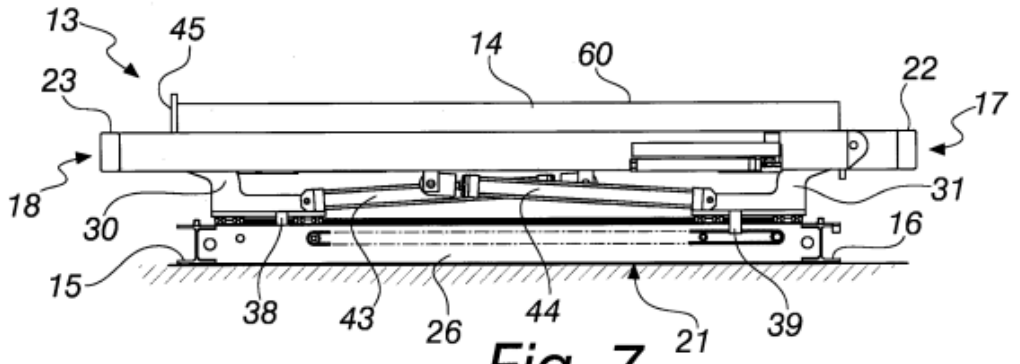

Fig. 7

    (b) According to feature 1.6.2, the two support and movement frames assume an inclined position in which one frame is oriented toward the other, such that the wall carried by the first support and movement frame can be transferred onto the second, opposing support and movement frame. Such an inclined configuration of the support and movement frames 17, 18 is illustrated, for example, in Figure 10 (cf. par. [0042]).

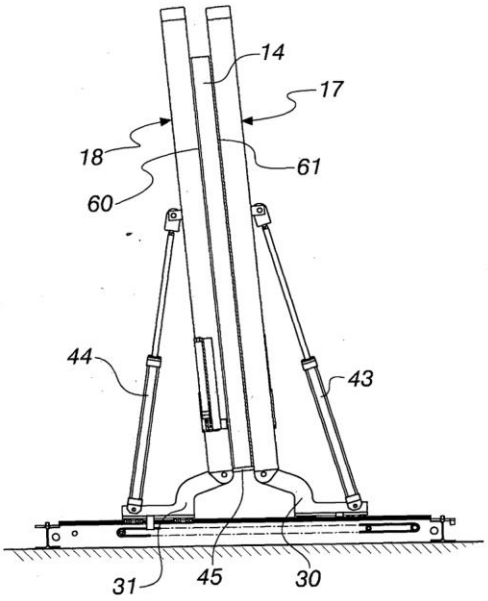

Fig. 10

48. To move from configuration a) to configuration b), the embodiment disclosed in the patent description teaches two alternative movement sequences (cf. paras. [0040] and [0041]). In the first variant, the two support and movement frames 17, 18 initially move outwardly in a linear lateral movement relative to the base frame 21 (Figure 8). Subsequently, the two support and movement frames 17, 18 rotate (Figure 9) until they face each other (Figure 10), thereby assuming the inclined configuration of feature 1.6.2. In the second variant, the lateral and rotational movements do not take place sequentially, but simultaneously. Feature 1.6.3 protects this second variant and specifies that the inclined configuration is achieved by laterally retracting the two support and movement frames relative to the fixed base frame while simultaneously rotating the support and movement frames.

49. With the term “lateral” the claim describes the movement of the two frames in the plane of the working surface relative to the fixed base frame. The lateral movement is provided by the means for translation according to feature 1.5. The term ”retraction” in feature 1.6.3 adds that the two frames are (laterally) moved *away* from each other, so that these frames are allowed to rotate from their substantially horizontal position (feature 1.6.1) into their inclined opposite position for turning the wall from the first onto the second frame (feature 1.6.2). The skilled person finds confirmation of this understanding in the patent description, which describes “the lateral retraction” (cf. par. [0041]) as the movement by which frames 17, 18 “retreat laterally outwardly with respect to the base frame 21” (cf. par. [0040]). Contrary to the decision of the CD Paris (impugned decision, paragraph 34), the claim does not contain any (further) requirements regarding the direction of the lateral retraction of the two frames.

50. Feature 1.6.3 further specifies that the lateral retraction and rotation of the support and movement frames must be performed simultaneously. The Court of Appeal agrees with Respondent and the CD Paris that the term “simultaneous” means that the translational and rotational movements occur at the same time. The Court of Appeal rejects Appellant’s argument that the word “simultaneous” merely refers to the (simultaneous) movement of the two opposite frames to reach the inclined position for turning the wall according to feature 1.6.2. When reading the claim as a whole it is clear that feature 1.6.3 specifies the movement from the substantially horizontal position of the frames in feature 1.6.1 to the inclined position in feature 1.6.2 and requires that the lateral and rotational movements in this trajectory occur at the same time. This is confirmed by paragraph [0041] of the patent description which explains: “Subsequently, or at the same time as the lateral retraction, the frames 17 and 18 rotate (..)” (emphasis added; CoA).

51. The skilled person will understand that feature 1.6.3 does allow a certain degree of flexibility. This is particularly the case because, when rotation and translation occur simultaneously, coordination of the movement paths of the two support and movement frames is required to ensure that the wall to be processed always remains fully supported by the respective support and movement frame and is not damaged. This may require an initial lateral movement of the two frames before rotation occurs, so as to avoid a scissor-like configuration of the two support and movement frames which may damage the wall or otherwise prevent the wall from being turned onto the other frame in accordance with feature 1.6.2. Whether such initial lateral movement is needed will (*inter alia*) depend on the thickness of the wall and the support location of the wall on the first support and movement frame. Besides this possible initial lateral movement, feature 1.6.3 requires that the rotational and (further) lateral movements of the frames occur simultaneously and not sequentially (paras. [0040] and [0041]).

52. Finally, as appears from feature 1.6 ("allow **each support and movement frame** to provide the following configurations"), the simultaneous translational and rotational movements must be performed by each individual frame. However, feature 1.6.3 does not require complete synchronicity or identical movement of both support and movement frames. Such requirement neither follows from the rest of the claim nor from the aim of the invention to provide a mechanism to turn the machined wall without the auxiliary carriages of the prior art.

V. Validity of the patent

53. Appellant raises a number of arguments why claim 1 would be invalid, i.e. lack of clarity, added matter, lack of novelty and lack of inventive step. None of these arguments is well-founded.

Clarity

54. Although an alleged lack of clarity cannot be raised as an invalidity ground against a granted claim, it can be raised against an amended claim in case the amendment introduces unclarity in the claim (cf. UPC-CoA-919/2026 and 920/2026, 16 September 2026, Heraeus v Vibrantz). According to Appellant, feature 1.6.3, which was added to claim 1 in the Principal Request, is unclear for three reasons:

    (1) the relation between feature 1.6.3 and the other features of feature group 1.6 is unclear;

    (2) the meaning of the words "lateral retraction" is unclear;

    (3) the meaning of the word "simultaneous" is unclear. In particular, according to Appellant, feature 1.6.3 could cover four scenarios depending on whether the support and movement frames perform the lateral and rotational movements **each individually** within the **same time frame** or **synchronous**, or whether the two frames perform these movements **both** within the **same time frame** or **synchronous**. It would be unclear which of these scenarios is protected by feature 1.6.3.

55. The Court of Appeal disagrees with Appellant. As discussed above, with a mind willing to understand, a skilled person will have no problem to understand the relationship between feature 1.6.3 and features 1.6.1 and 1.6.2. The Court of Appeal therefore agrees with the CD Paris that there is no unclarity in this respect. Also the terms "lateral retraction" and "simultaneous" in feature 1.6.3 are clear. To avoid repetition, reference is made to the foregoing interpretation of feature 1.6.3.

No added matter

56. Appellant raises three arguments why it considers feature 1.6.3 to violate Art. 123(2) EPC:

    (1) paragraph [0041] from which feature 1.6.3 is derived[2] does not disclose that the lateral retraction

[2] The parties did not submit the application as filed in the proceedings. In accordance with the parties' position in these proceedings, the Court of Appeal will therefore refer to the paragraphs of the patent as granted when discussing added matter and assume that these are the same as in the application.

occurs relative to the fixed base frame;

(2) paragraph [0041] does not provide basis for the term “simultaneous” in feature 1.6.3;

(3) paragraph [0041] is part of a specific example set out in paragraphs [0038]–[0042] and Figures 7–10, which contains various elements that are inextricably linked to the subject-matter of feature 1.6.3 and should therefore have been included in the claim. By not doing so, there is an unallowable intermediate generalization.

57. As this Court previously held, there is added matter if the claim as granted contains subject-matter that extends beyond the content of the application as filed. In order to determine whether there is added matter, the Court must thus first ascertain what the skilled person would derive directly and unambiguously using its common general knowledge and seen objectively and relative to the date of filing, from the whole of the application as filed, whereby implicitly disclosed subject-matter, i.e. matter that is a clear and unambiguous consequence of what is explicitly mentioned, shall also be considered as part of its content (UPC-CoA-382/2024, 14 February 2025, Abbott v Sibio; UPC-CoA-646/2024, 25 November 2025, Meril v Edwards; UPC-CoA-901/2025, 17 April 2026, Abbott v Sinocare).

58. One situation where added matter may arise is when claimed subject-matter is obtained by importing one or more features from a certain embodiment in the application into a claim, while omitting one or more other features of this embodiment which were presented in combination with the imported feature(s) in the disclosure of this embodiment. This is referred to as an ’intermediate generalisation’. An intermediate generalisation is generally considered to be unallowable if there is a clearly recognisable functional or structural relationship among the omitted feature(s) and the claim features, also referred to ’an inextricable link’ between the omitted feature(s) and the claim features (UPC-CoA-884/2025, 13 August 2026, Sibio v Abbott).

59. The Court of Appeal disagrees with Appellant that added matter exists.

60. First, Appellant’s statement is incorrect that the description does not disclose the movement of lateral retraction of feature 1.6.3 to be relative to the fixed base frame. This is specifically stated in paragraph [0040] which relates to the same embodiment as paragraph [0041] on which feature 1.6.3 is based (“... *the two frames 17 and 18 retreat literally outwardly with respect to the base frame as in Figure 8* …”, emphasis added CoA). Reference can further be made to paragraph [0021] which generally discloses the use of a fixed base frame as a reference point for the means for translation and rotation (“… *both provided with means for translation and rotation, 19 and 20 respectively, with respect to a base frame 21, which is fixed to the ground*.”; emphasis added CoA). As discussed above, these means of translation and rotation perform the movements specified in feature 1.6.3, including the movement of lateral retraction. The use of the fixed base frame as a point of reference for lateral retraction (translation) of the frames in feature 1.6.3 is therefore unambiguously disclosed.

61. This also applies to the feature of simultaneous lateral retraction and rotation in feature 1.6.3. As the CD Paris correctly noted, this feature is directly and unambiguously disclosed in paragraph [0041] which describes that “the frames 17 and 18 rotate” “at the same time as the lateral retraction”. The fact that this passage uses the words “at the same time” instead of “simultaneous” does not alter this. As noted above, these terms are understood by a skilled person to be synonymous. As this Court held, it is not required that a claim uses the exact same wording as used in the original application, as long as the skilled person would derive the combination of features from the whole application (UPC-CoA-382/2024, 14 February 2025, Abbott v Sibio). That is the case here.

62. Finally, the Court of Appeal does not agree with Appellant that there would be an unallowable intermediate generalization. According to Appellant, the linear actuators 43 and 44 in paragraph [0041] would be inextricably linked to the rotational movement of feature 1.6.3, and such inextricable link would also exist for a number of non-optional process steps in the example, i.e. (i) a first step in which an electronic control unit is used, (ii) using the various movement motors for

translation motor chains and linear actuators for rotation, and (iii) using the wall resting on abutments. The Court of Appeal is of the opinion that none of these elements will be recognized by a skilled person as inextricably linked to feature 1.6.3.

63. When reading the description, the skilled person notes the multiple, general references to the "means for translation and rotation" which provide the configurations of 1.6.1 and 1.6.2 and the movements of feature 1.6.3 (see e.g. paras. [0016], [0021] and [0046]). Given these general references, the skilled person will understand that the elements referred to by Appellant are merely implementation details to which the generally worded means for translation and rotation are not limited. This also applies to the abutments mentioned by Appellant. There is nothing in the description to suggest that these elements are inextricably linked to the measures of feature 1.6.3. By not including these implementation details, Respondent did not violate Art. 123(2) EPC.

Novelty

64. Appellant relies on MB1 and MB7 to argue that the invention in claim 1 of the patent is not novel. The Court of Appeal disagrees.

MB1

65. MB1 discloses a machine for machining a prefabricated wall (col. 1, lines 3–9). By way of background, MB1 describes that in conventional machines, the machining points are not positioned automatically, but manually by an operator. According to MB1, such procedure is labour-intensive, delays the machining process and entails the risk of inaccuracies (col. 1, lines 34–40).

66. The tool technology disclosed in MB1 uses machines that work automatically using a predetermined program. For this purpose, at least one of the individual elements used to manufacture a prefabricated component is provided with markings to identify the prefabricated component, which markings can then be scanned. The generated signals can actuate a program control device which controls the position of the tools in accordance with the predetermined program (col. 2, lines 3–14).

67. A schematic overview of a plant for the production of prefabricated components according to MB1 is shown in Figure 1:

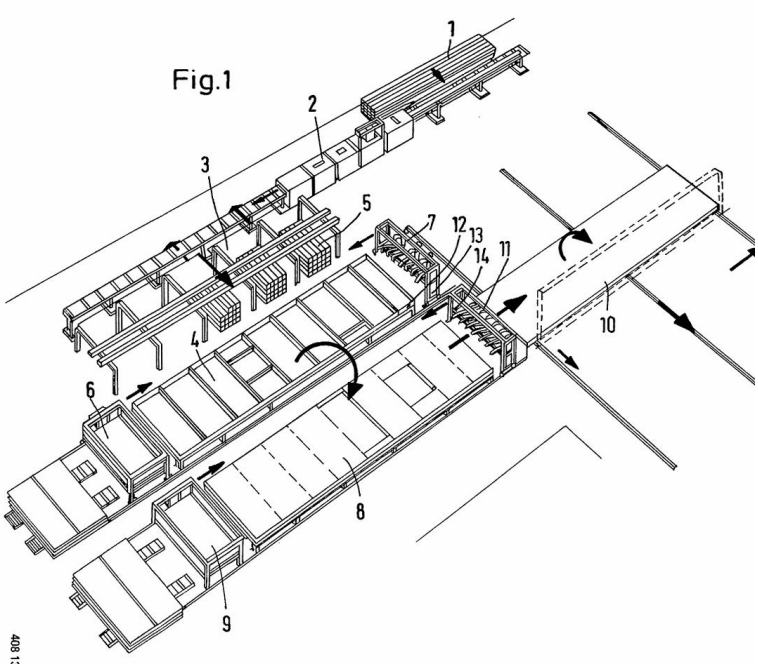

68. As shown in this figure, the plant comprises several machines, including a sleeper processing and marking station 2, a sleeper transport and buffer device 3, a framing station 4, and a panel laying station 8.

69. The framing station 4 and the panel laying station 8 each comprise a processing bridge 7 or 11, respectively. By means of processing bridges 7 and 11, the wall to be processed can be machined on the respective working surface of the framing station 4 and the panel laying station 8. The processing bridges 7 and 11 are movable along the respective working surface, and the tools for processing the wall are arranged on the processing bridges (col. 2, line 29 to col. 3, line 24). Both processing bridges 7 and 11 are preferably of similar construction and are suitable for processing the front side (processing bridge 7) and the rear side (processing bridge 11) of the wall resting on the respective working surface.

70. After processing the front side of the wall on the framing station 4, the wall is transferred onto the working surface of the panel laying station 8 by means of a so-called butterfly turner, so that the rear side of the wall can be processed by the processing bridge 11 (cf. arrow from framing station 4 to panel laying station 8 in Figure 1). The use of a butterfly turner is generally mentioned in the passage from col. 2, line 65 to col. 3, line 4 of MB1. MB1 does not disclose any detailed information or design specifications regarding the configuration or operation of the butterfly turner.

71. From MB1, therefore, a system can be derived which comprises two separate machines in the form of the framing station 4 and the panel laying station 8, each with a working surface and an associated portal 7 or 11, respectively. Each of these machines therefore exhibits features 1.0, 1.1, 1.2 and 1.3 of claim 1.

72. MB1 does not disclose a machine having a working surface comprising first and second opposite support and movement frames (feature 1.4) which are each equipped with means for translation and rotation with respect to a fixed base frame (feature 1.5) configured so as to allow each support and movement frame to provide the configurations set out in features 1.6.1 and 1.6.2 and perform the movements set out in feature 1.6.3.

73. The fact that a machine according to claim 1 may contain more than one working surface, as explained above, does not alter this. This does not take away the fact that the machine according to claim 1 should at least have one working surface comprising two frame elements according to features 1.4–1.6.3. Such working surface is missing in the disclosure of MB1. Instead, the plant in MB1 comprises two machines each having a separate working surface with an associated portal without first and second opposite support and movement frames as meant in feature 1.4.

74. Also, the claimed features of the means for translation and rotation are missing in the disclosure of MB1. As stated, MB1 generally mentions the use of a butterfly turner for turning over the wall from framing station 4 to panel laying station 8, but an explicit disclosure of features 1.5–1.6.3 of the characterising portion of claim 1 cannot be derived from MB1. The reference by Appellant to the arrows in Figure 1 is insufficient to establish the presence of the specifically claimed means (let alone the provision thereof in *both* frames as required by the claim). The curved arrow in Figure 1 seems to represent the turning and displacement motion of *a panel* from framing station 4 to panel laying station 8, without the involvement of a frame element and without providing any details about the manner of operation. The arrows on the left and right sides of the framing station 4 seem to relate to the moveable chipboard or gypsum plasterboard support 6 (col. 2, lines 44-47) – not to the movement of the framing station 4 as such –, whereas the arrow on the panel laying station 8 seems to relate to the conveyance of the panels to distribution and installation device 10 (col. 3, lines 4-7). None of these elements complies with the specific requirements for the means for translation and rotation of the claim.

75. Appellant appears to acknowledge this and additionally relies on MB6 in this respect. MB6 would show a butterfly turner according to the common general knowledge on the priority date of the patent. Even assuming that this is the case and that a skilled person would read MB6 into MB1, as Appellant argues, MB1 still does not disclose all features of the means for translation and rotation of claim 1. In particular, as will be discussed below in the context of inventive step, the butterfly turner

of MB6 (*inter alia*) has no means for *translation* according to feature 1.5, and, *a fortiori*, no means for simultaneous *lateral retraction* and rotation as required by feature 1.6.3.

MB7

76. The subject-matter of claim 1 is also novel in view of the disclosure of MB7.

77. The video of MB7 shows the operation of a machine for machining wooden wall elements. The machine comprises a portal that is movable relative to a working surface that comprises two parts placed in series ("working surface part 1" and "working surface part 2" in the screenshot below). Both parts of the working surface can support and move a wall resting on the working surface and are machinable using an associated portal comprising at least two processing heads (cf. MB7 at 1:05–1:14 and 4:04–4:13).

78. The screenshot below shows the machine with these elements (MB7 at 0:17; annotations CoA):

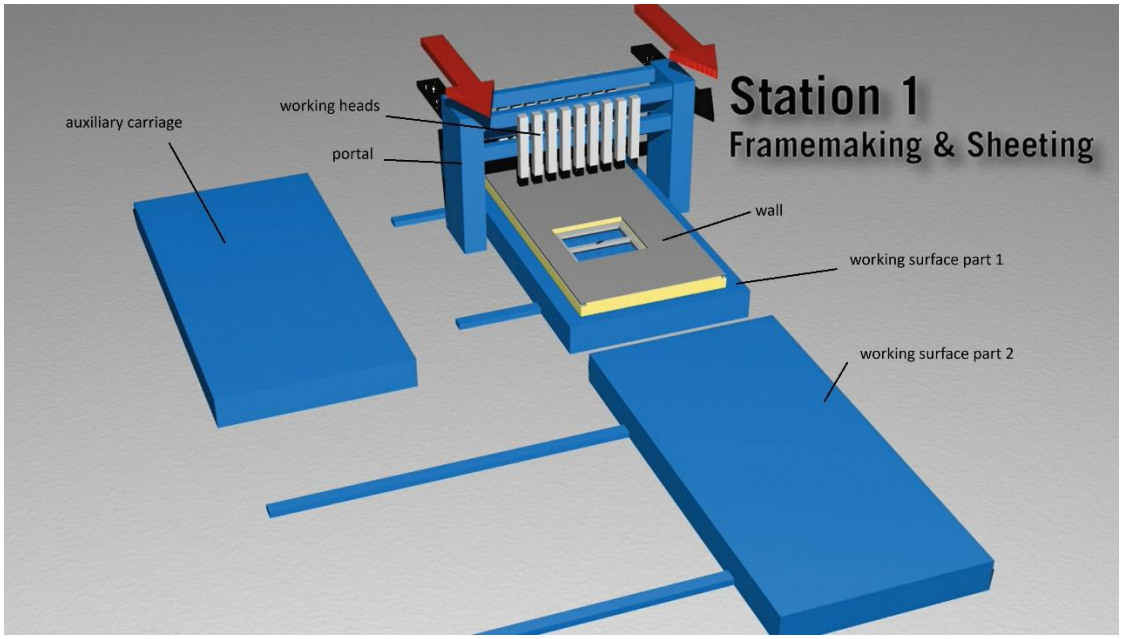

79. Accordingly, it can be said that MB7 discloses a machine for machine walls (feature 1.0), comprising a working surface (feature 1.2) and a portal with working heads (feature 1.1) which is associated with the working surface (feature 1.3).

80. In addition to the two-part working surface, the machine comprises an additional frame structure arranged laterally, which is used for turning the wall resting on working surface part 1 ("auxiliary carriage" in the illustration above). This third frame structure does not comprise a working surface within the meaning of features 1.2 and 1.3, since its surface cannot be reached by the portal with the working heads and therefore cannot be machined by it. The third frame structure merely serves as an auxiliary frame. This corresponds, at least in principle, to the prior art described in paragraphs [0008]–[0011] of the patent description, from which the patent expressly seeks to distinguish itself.

81. Both parts of the working surface are equipped with means that permit translational and rotational movements of the respective frame structure. According to the screenshot below, working surface part 1 can be moved translationally towards the auxiliary carriage and, in addition, can rotate to bring the wall resting on working surface part 1 towards the auxiliary carriage (screenshot of MB7 below left). Working surface part 2 is likewise movable in a translational manner. Furthermore, the wall resting on working surface part 2 can also be deposited through a rotational movement of the frame at the end of the production cycle (screenshot of MB7 below right). As shown in these illustrations, the movements of both parts of the working surface occur relative to a fixed floor structure of the machine comprising a rail system.

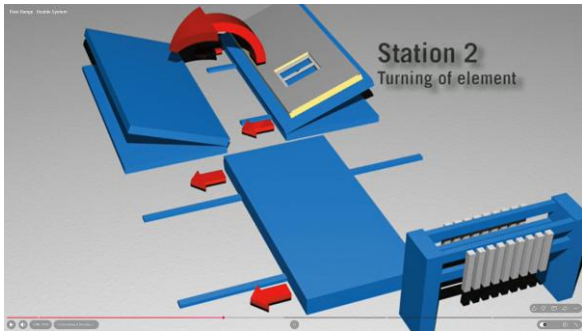

Screenshot of MB7 at 1:57

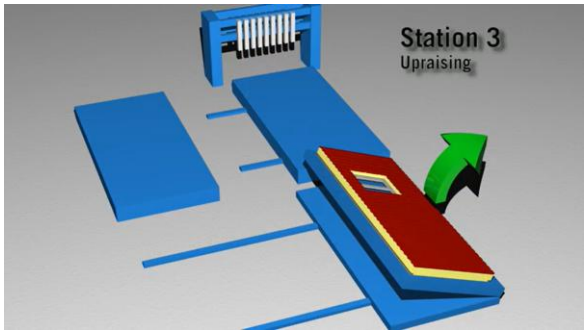

Screenshot of MB7 at 4:21

82. Accordingly, both parts of the working surface can be said to be equipped with means for translation and rotation according to feature 1.5. Equally, it can be said that the configuration of feature 1.6.1 is disclosed in MB7 since working surface parts 1 and 2 can adopt a lowered substantially horizontal configuration. However, the two-part working surface of MB7 cannot provide the configurations and movements of features 1.6.2 and 1.6.3. As a consequence, the two parts of the working surface can also not be considered to be "opposite" one another as meant in feature 1.4 of the claim (cf. paragraph 41 above).

83. As shown above, the rotational movement of working surface part 1 serves to transfer the wall onto the auxiliary frame, whereas the rotational movement of working surface part 2 serves to unload the finished wall element at the end of the production process. MB7 does not disclose (the capability of) an inclined configuration of both frames in which the wall is transferred from the frame structure of working surface part 1 onto the frame structure of working surface part 2. An inclined configuration analogous to feature 1.6.2 is shown only between the frame structure of working surface part 1 and the frame structure of the auxiliary carriage. However, this does not correspond to feature 1.6.2 in conjunction with feature 1.4, as the frame structure of the auxiliary carriage is not part of the working surface but is a separate, ancillary component of the machine according to MB7. Furthermore, the translational movement and the rotational movement of the frame structures of working surface parts 1 and 2 are always carried out sequentially rather than simultaneously as required by feature 1.6.3.

84. The Court of Appeal therefore rejects Appellant's argument that the invention would lack novelty in view of MB7. This argument is based on the incorrect assumption that the auxiliary carriage used in MB7 can be regarded as one of the two opposite frames of features 1.4–1.6.3. Furthermore, even in this incorrect interpretation, feature 1.6.3 is missing. MB7 does not disclose means for translation and rotation that are configured so as to allow simultaneous lateral retraction and rotation according to feature 1.6.3. Appellant's argument that such means would be shown in the left screenshot depicted above (MB7 at 1:57) is incorrect. The arrows in this screenshot merely show the direction of movement, not the (mutual) timing of these movements, and, moreover, these movements are only disclosed with respect to working surface part 1, not with respect to the auxiliary carriage (even assuming that the auxiliary carriage could be considered as a frame according to feature 1.4).

Inventive step

85. Appellant further argues that the claimed invention lacks an inventive step. To substantiate this argument, Appellant relies in this appeal on MB1 combined with common general knowledge, MB6, MB7, MB2 or MB8, and on MB7 combined with MB2 or MB8. The Court of Appeal is of the opinion that none of these combinations renders the claimed invention obvious.

The principles for assessing inventive step

86. The approach taken when establishing inventive step is set out by this Court in UPC-CoA-528/2024

and UPC-CoA-529/2024 (25 November 2025, Amgen v Sanofi/Regeneron; see also UPC-CoA-646/2024, 25 November 2025, Meril v Edwards).

87. First, the object of the invention (the objective problem) must be established. This must be assessed from the perspective of the skilled person with its common general knowledge at the application or priority date of the patent. In this assessment, it should be established what the invention adds to the state of the art, not by looking at the individual features of the claim, but by comparing the claim as a whole in the context of the description and the drawings, thus also considering the inventive concept underlying the invention (the technical teaching), which must be based on the technical effect(s) that the skilled person on the basis of the patent understands is (are) achieved with the claimed invention. The claimed solution is obvious when at the relevant date, the skilled person, starting from a realistic starting point in the state of the art in the relevant field of technology, wishing to solve the objective problem, would (and not only: could) have arrived at the claimed solution (UPC-CoA-528/2024 and UPC-CoA-529/2024, 25 November 2025, Amgen v Sanofi/Regeneron).

88. A starting point is realistic if the teaching thereof would have been of interest to a skilled person who, at the relevant date, wishes to solve the objective problem. This may for instance be the case if the relevant piece of prior art already discloses several features similar to those relevant to the invention as claimed and/or addresses the same or a similar underlying problem as that of the claimed invention. There can be more than one realistic starting point and the claimed invention must be inventive starting from each of them.

89. The skilled person has no inventive skills and no imagination and requires a pointer or motivation that, starting from a realistic starting point, directs it to implement a next step in the direction of the claimed invention. As a general rule, a claimed solution must be considered not inventive / obvious when the skilled person would take the next step prompted by the pointer or as a matter of routine and arrive at the claimed invention.

Application to the present case

90. The aim of the present invention is to provide a machine for machining walls which can be devised without auxiliary lateral carriages for overturning the wall being processed. By doing without the lateral carriages, the drawbacks of using these carriages for turning the wall can be avoided and the machine can be made more compact overall. In addition, the machine thus devised is to be faster and more precise than conventional machines (cf. paras. [0012]–[0015]). These aims are achieved in the claimed machine having a working surface with two frame elements that are both equipped with the claimed means for translation and rotation of the frames (cf. [0046]–[0048]).

91. The object of the invention (the objective problem to be solved by the patent) is therefore to develop a machine for machining walls having an improved mechanism for turning a wall that is being machined. Within this objective problem, it is a (sub-)objective to devise a machine for machining walls with no auxiliary lateral carriages for overturning a wall being machined resulting in a more compact machine with increased speed and precision.

92. Appellant's argument that this problem is not solved over the entire scope of claim 1 is incorrect. It is undisputed that in the claimed machine, lateral carriages are no longer needed for turning over the wall to be processed. Appellant's assertion that a skilled person could still design a machine according to claim 1 that would be equal in size or even larger than a conventional machine with lateral carriages, does not alter the fact that lateral carriages are no longer needed in the claimed machine resulting in the benefits described in the patent (cf. paras. [0008] and [0009]).

93. Similarly, the assertion that an increase in speed could also be obtained with a standard butterfly turner "using other drives or motors to accelerate the turning process", as Appellant argues, is not relevant. This does not mean that an increase in speed is not obtained in the claimed machine (*inter alia,* by the simultaneous lateral and rotational movements of the frames). At most, this means that an increase in speed may also be obtained by other, non-patented means.

MB1 as a starting point

94. Although MB1 does not explicitly deal with the same problem as the claimed invention, MB1 does relate to a machine for machining prefabricated walls containing a generally described mechanism for turning over the walls to be machined. The Court of Appeal therefore considers MB1 to be a realistic starting point for a skilled person who is in search for ways to improve the turning mechanism of machines for machining walls.

95. As discussed above, MB1 does not disclose a machine having a working surface comprising first and second opposite support and movement frames (feature 1.4) which are each equipped with means for translation and rotation for turning the wall to be machined from the first frame onto the second frame (features 1.5–1.6.3). Instead, MB1 discloses the use of two separate working stations (framing station 4 and panel laying station 8) each having their own specific equipment and functionalities, including a working surface and an associated portal for machining the front side of the wall (framing station 4 and portal 7) and the rear side of the wall (panel laying station 8 and portal 11).

96. MB1 does not contain information that would lead the skilled person towards adapting these machines to include a working surface comprising two opposite frames each having means for turning the wall so that the front and rear sides of the walls can be machined using the same working surface and associated portal. MB1 neither contains information that would lead a skilled person towards the claimed means for translation and rotation and the configurations and movements provided by these means. During the oral hearing, Appellant merely referred in this respect to the general reference in MB1 to the use of a butterfly turner. This is insufficient to direct the skilled person to implement a next step in the direction of the claimed invention.

97. Already for this reason, Appellant's argument that the claimed machine lacks an inventive step in view of MB1 cannot be followed.

98. Even leaving this aside, the Court of Appeal does not consider the claimed invention to be obvious in view of the various combinations suggested by Appellant when starting from MB1.

MB1 combined with common general knowledge

99. Starting from MB1, extensive redesign is required to arrive at the claimed machine having features 1.4–1.6.3. Even if these specific features would be considered to be generally known to the person skilled in the art, as Appellant argues, without any suggestion or additional teaching in the prior art, implementation of these features in MB1 would require a significant redesign of the machine that would go far beyond any routine implementation. Consequently, the machine of claim 1 involves an inventive step over the teaching of document MB1 combined with common general knowledge.

MB1 combined with MB6

100. MB6 discloses a butterfly turning device in which the wall to be processed can be turned from a first frame associated with a first working surface to a second frame arranged adjacent thereto and associated with a second working surface. Both frames are equipped with means permitting *rotation* of the respective frame, such that each frame can be transferred from a lowered configuration into an inclined configuration. However, means for *translating* the frames cannot be derived from the video. Accordingly, at least features 1.5, 1.6 and 1.6.3 are not disclosed. Likewise, MB6 does not show a portal or a working surface associated with such portal, and therefore it neither discloses features 1.1, 1.2, 1.3 and 1.4.

101. MB6 may provide the skilled person with an example of how a butterfly turning device can be implemented in MB1, since, as in MB1, the wall to be processed is turned from one separate working surface onto another separate working surface. However, this does not result in a machine according to claim 1, i.e. with the butterfly turner being integrated in the working surface so that two parts of the working surface would be associated with a common portal. Not only does the

arrangement lack means for *translating* a support and movement frame and, consequently, features 1.5, 1.6 and 1.6.3 are missing, but it also lacks feature 1.4 *et seq.*, since even in such an arrangement, the working surface associated with a given portal does not comprise separate support and movement frames, as already explained with respect to MB1.

MB1 combined with MB7

102. The disclosure of MB7 is even more remote than that of MB6. As explained above, MB7 discloses the use of an auxiliary frame for turning over a wall, which the claimed machine seeks to avoid. Moreover, the two parts of the working surface associated with the portal are arranged in MB7 one behind the other rather than side by side as is the case for the two working surfaces disclosed in MB1. There is no suggestion in MB7 or in MB1 how to implement the teaching of MB7 into MB1 or how to adapt the machine of MB1 to arrive at the claimed invention.

103. Even if the auxiliary frame in MB7 were to be taken as a model for the implementation of the butterfly turning device in MB1, the resulting combination of teachings would not bring the skilled person materially closer to the claimed subject-matter than a combination with the disclosure of MB6. This is because, even in such a combination, the two working surfaces would still not be associated with a common portal, and still, no means for simultaneous lateral retraction and rotation of the frames according to feature 1.6.3 would be suggested. As discussed above, such means are also not disclosed in MB7.

MB1 combined with MB2

104. MB2 discloses a lever turner comprising a housing and a transport device with pivoting levers for turning panel-shaped workpieces. As shown in Figure 1 (top view), the working surface of the lever turner contains rollers 7 for transporting plate 1 and comprises two lifting frames 3 and 8.

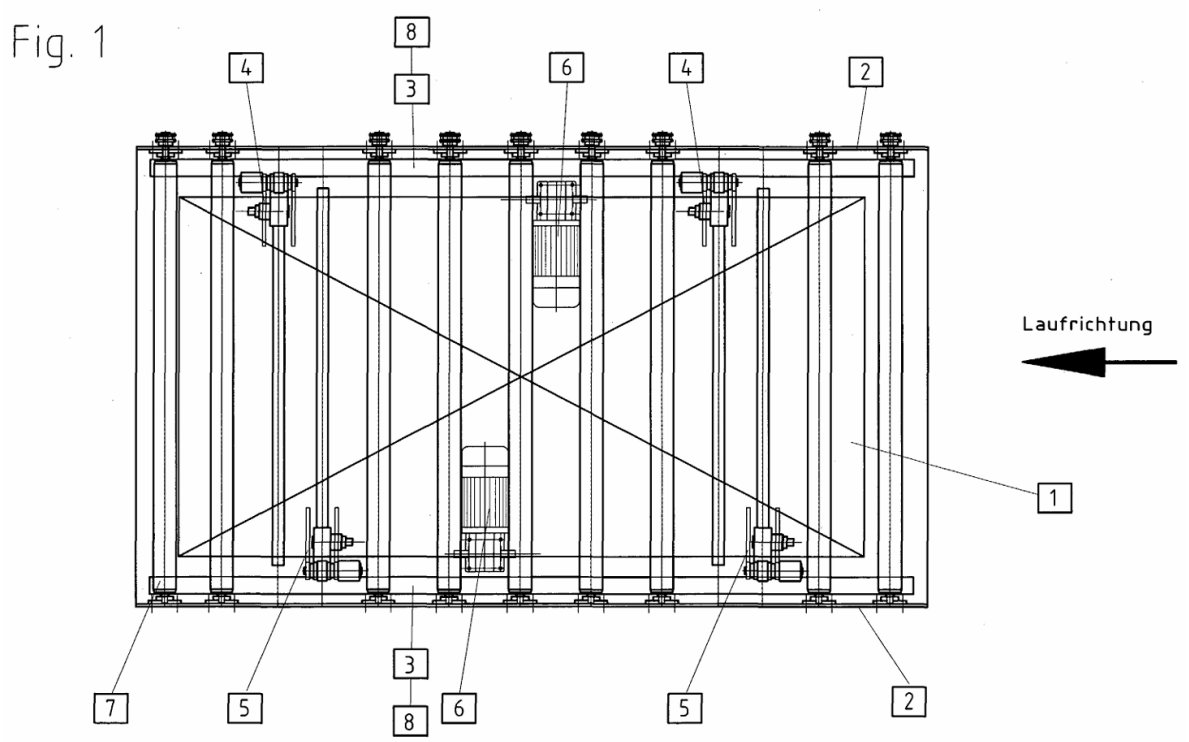

105. Each of the two frames 3 and 8 is equipped with a lever unit 4 and 5, respectively. The two frames are arranged such that they can be moved independently of each other, either translationally or in a pivoting manner (page 2, description of Figure 1). Accordingly, the two frames with lever units 4 and 5 can be said to be equipped with means for translation and rotation according to feature 1.5. However, the lever turner of MB2 does not comprise a portal (feature 1.1) associated with a working surface for machining a wall (features 1.0, 1.2, 1.3 and 1.4).

106. The operation of the lever turner for turning a panel is described in MB2 with reference to Figure 2.

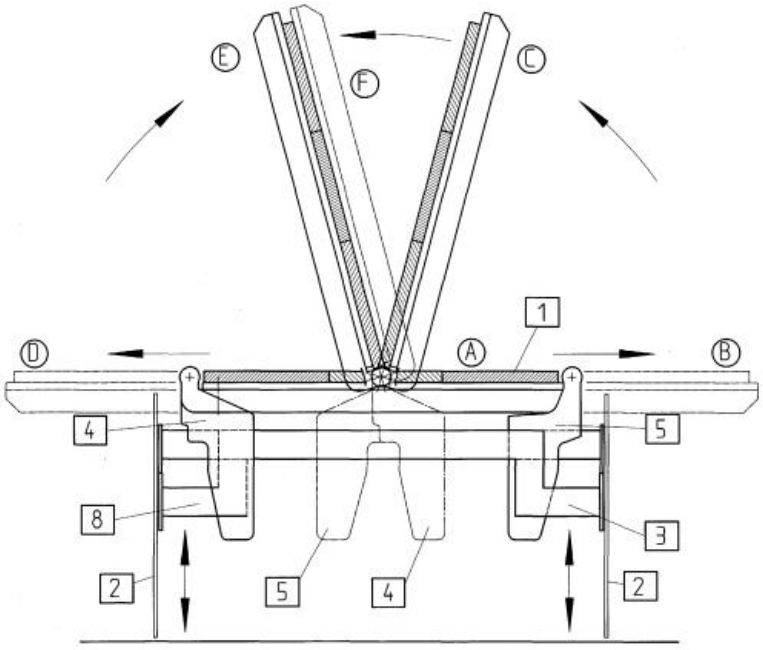

107. Plate 1 first rests on rollers 7. To turn the plate to its other side, the lifting frame 3 moves up first. The lever unit 4 is thereby raised to plate 1 and is then moved linearly from position A to position B. Subsequently, lever unit 4 is pivoted into position C. Thereafter, lever unit 5 is raised, likewise moved linearly to position D and pivoted into position C. From position C, lever units 4 and 5 are pivoted together to position E, so that plate 1 can be transferred from lever unit 4 to lever unit 5. Subsequently, both lever units are pivoted back and then returned linearly to their initial position.

108. Accordingly, the lever units of the lever turner assume two configurations. The configuration in initial position A corresponds to the lowered, substantially horizontal configuration of feature 1.6.1 (albeit not for machining a wall; see above). The configuration in position E corresponds to the inclined configuration of feature 1.6.2. However, since MB2 teaches that a translational movement of the two lever units 4 and 5 is performed first and only thereafter a pivoting movement occurs, MB2 does not disclose feature 1.6.3 according to which the two movements must be carried out simultaneously.

109. Appellant argues that feature 1.6.3 is disclosed in MB2 by the simultaneous pivoting of frames 3 and 8 from position C to position E for transferring the panel from one frame onto the other. That is incorrect. As stated above, Feature 1.6.3 requires a simultaneous lateral and rotational movement of each frame, not merely a rotation of both frames at the same time. Appellant also relies in this context on the passage in MB2 cited below (taken from the Grounds of Appeal, par. 134):

> Hebeleinheit 4 anliegt. Nun schwenken die beiden Hebel gemeinsam in POS. E. Die Platte wird nun von der Hebeleinheit 4 auf die Hebeleinheit 5 übergeben, indem der Hebel der Hebeleinheit 4 zurückschwenkt in POS. B, gleichzeitig der dazugehörige Hubrahmen 8 abgesenkt und die Hebeleinheit 4 wieder in ihre Ausgangsstellung auf der linken Seite gefahren wird. Die Platte

110. This passage does not disclose feature 1.6.3. The passage describes that lifting frame 8 is lowered at the same time as lever unit 4 (of lifting frame 3) swings back to position B. This is not the simultaneous lateral and rotational movement according to feature 1.6.3. Even if such a simultaneous movement could be derived from the cited passage, this passage relates to a movement sequence between the inclined and the lowered configuration *after* the plate has turned, and not, as required by feature 1.6.3, to the movement sequence between the lowered and the inclined position *before* the plate is turned.

111. Since neither MB1 nor MB2 discloses feature 1.6.3, even an assumed combination of the teachings of these two documents cannot lead to the claimed machine in an obvious way.

112. Moreover, it is unclear why or how a skilled person would integrate the lever turner of MB2 into the plant of MB1. One question that arises is where in MB1 the skilled person would implement the lever turner of MB2, e.g. in one or both of the working stations 4 and 8. If the skilled person would implement the lever turner in one of the two stations (for example in working station 4) and discard the other working station (for example working station 8), the skilled person would be confronted with the problem of how to implement the functionality and equipment of the discarded working station in the remaining and adapted working station, taking into account the processing of the walls previously carried out via two portals and the supply of the chipboards and plasterboards via the loaders 6 and 9. This does not appear to be a straightforward operation. Neither MB1 nor MB2 provides a solution for this.

113. During the oral hearing, Appellant argued that MB2 would be implemented in working station 4, where the wall would then be turned using the lever turner. Subsequently, the wall would be transferred to working station 8 where it would be machined as described in MB1. There is no indication or motivation for this adaptation in MB1. At most, it may be argued that a skilled person "could" have implemented the lever turner of MB2 in the plant of MB1, but why or how the skilled person "would" embark on this operation remains unclear.

MB1 combined with MB8

114. The video of MB8 neither renders the patented invention obvious.

115. MB8 discloses a machine for processing walls, comprising a portal with one or more working heads and a working surface associated with the portal on which a wall to be processed rests. The portal and the working surface are configured to move relative to one another (cf. MB8 at 4:30–6:20). MB8 therefore discloses features 1.0, 1.1, 1.2 and 1.3.

116. The wall being processed is turned over using a butterfly turning device and an auxiliary frame (MB8 at 6:01–6:38). The auxiliary frame is not part of the working surface. In substance, the turning operation in MB8 is very similar to the operation shown in MB7 with respect to turning the wall from working surface part 1 onto the auxiliary frame shown therein. Features 1.4–1.6.3 are therefore also missing in MB8.

117. While MB8 may show, as Appellant argues, that lateral retraction and rotation of the auxiliary frame occur simultaneously, this occurs *following* the turning over of the wall onto the auxiliary frame, not between a lowered horizontal position of the frames and an inclined position as required by feature 1.6.3. Moreover, MB8 does not disclose the presence of means according to feature 1.5 in both frame elements of a working surface.

118. In addition, there appears to be no motivation for the skilled person to combine the teachings of MB8 with MB1. Even if the auxiliary frame in MB8 were to be taken as a model for the butterfly turning device in MB1, the combination of teachings would still not result in the claimed machine. In such a combination, a working surface comprising two support and movement frames machined with a common portal would still not result, and still, no means for simultaneous lateral retraction and rotation of both frames according to feature 1.6.3 would be suggested.

119. Appellant's additional reference to MB2 cannot alter this. Leaving aside that Appellant has not explained why combining *three* references should nevertheless result in a lack of inventive step, also this combination does not make the invention obvious. Given the entirely different turning processes in MB1, MB8 and MB2, there is no reason to assume that the skilled person would be motivated to combine the movement sequences of a machine having a working surface and an auxiliary frame (MB8), or a machine having two separate working surfaces (MB1), with the movement sequences of a lever turner (MB2). In the former case (MB8 and MB1), the turning operation takes place from one

surface onto an adjacent surface, whereas in the latter case (MB2) the turning operation is performed in situ, i.e., without transferring the wall to another support surface. How or why the one would be implemented into the other remains unclear. And even if such combination would be made, the teaching of MB8 in combination with the disclosures of MB1 and MB2, would still not lead to the claimed machine, since (*inter alia*) feature 1.6.3 is also missing in MB8.

MB7 as a starting point

120. As discussed above, MB7 discloses the use of an auxiliary frame for turning over a wall being processed. This corresponds to the prior art described in paragraphs [0008]–[0011] of the patent. The Court of Appeal can leave it open whether MB7 is a realistic starting point, as there is no information in MB7 that would lead the skilled person towards the claimed machine and, moreover, none of the combinations suggested by Appellant results in a lack of inventive step.

MB7 combined with MB2

121. Since neither MB7 nor MB2 discloses feature 1.6.3, even an assumed obvious combination of the teachings of these two disclosures cannot lead to the machine claimed in claim 1.

122. In addition, it is questionable that the skilled person would have readily recognised that (or how) the complex machine disclosed in MB7, comprising working surface parts 1 and 2 and an auxiliary frame for turning the wall, could be replaced by the lever turner of MB2. Neither MB7 nor MB2 provides any suggestion of such a substitution and Appellant has not explained why this should nevertheless be obvious.

MB7 combined with MB8

123. As discussed above, similar to MB7, also the machine of MB8 uses an auxiliary frame for turning over the wall and misses features 1.4–1.6.3. Even if the skilled person would combine the teachings of MB7 and MB8, the claimed machine would not be obtained. For the reasons set out above, adding MB2 would not change this.

VI. Conclusion

124. The Court of Appeal is of the opinion that all claims of the Principal Request are valid. The Court will therefore not address the auxiliary requests.

125. In its Statement for revocation, Appellant requested the revocation of claims 1, 3, 4, 5, 6, 9 and 10 of the patent. As noted above, claims 2, 7 and 8 are excluded from this revocation action. This means that claims 2, 7 and 8 will remain in effect in their granted form and remain dependent on claim 1 as granted irrespective of the combination made with these claims (i.e. irrespective of whether claims 2, 7 or 8 are invoked as dependent on a further claim than claim 1 and/or are invoked in combination with a further claim that depends on claims 2, 7 and/or 8).

126. As Respondent does not defend claims 1, 3, 4, 5, 6, 9 and 10 in their granted form but only according to the Principal Request, the patent will be revoked for all Contracting Member States to the extent that the subject-matter of these claims extends beyond the claims of the Principal Request.

127. In accordance with Art. 69(1) UPCA, Appellant, as the unsuccessful party, shall be ordered to pay the costs of the proceedings on appeal. As in first instance, the Court of Appeal sets the value of the action in appeal at EUR 100,000.

DECISION:

The Court of Appeal:

1. revokes claims 1, 3, 4, 5, 6, 9 and 10 of the patent for all Contracting Member States where the patent is in effect to the extent that the subject-matter of these claims extends beyond the claims of the

Principal Request, which read as follows:

1. A machine (10) for machining walls, particularly for walls made of wood or multilayer walls and the like, comprising a portal (11) with one or more working heads (12), and a working surface (13) for resting a wall (14) to be machined, said portal (11) and said working surface (13) being configured for the movement of one with respect to the other said machine for machining walls being characterized in that said working surface (13) comprises a first and second opposite support and movement frames (17, 18), both provided with means for translation and rotation (19, 20) with respect to a fixed base frame (21) and configured so as to allow each support and movement frame (17, 18) to provide the following configurations:

- a lowered substantially horizontal configuration for machining a wall (14),

- an inclined configuration that faces the other opposite support and movement frame (17, 18) for turning over a wall (14) supported by said first support and movement frame (17) onto said second opposite support and movement frame (18),

by a lateral retraction of the said support and movement frames relatively to the said fixed base frame (21) and simultaneous rotation of the said support and movement frames (17, 18).

3. The machine according to one or more of the preceding claims, characterized in that said translation and rotation means (19, 20) provide for each frame (17, 18) at least two translation and rotation units, which are applied to respective spaced crossmembers of the corresponding frame.

4. The machine according to one or more of the preceding claims, characterized in that said translation and rotation means (19, 20) are interposed between a crossmember (24, 25) of the corresponding frame (17, 18) and a corresponding underlying crossmember (26, 27) of the base frame (21).

5. The machine according to one or more of the preceding claims, characterized in that said translation and rotation means (19, 20) comprise a slider (30, 31) that is arranged so as to slide on a guide (32, 33) arranged above the corresponding crossmember (26,27) of the base frame (21), the corresponding crossmember (24, 25) of the support and movement frame (17, 18) being pivoted to the slider (30, 31).

6. The machine according to the preceding claims, characterized in that said slider (30, 31) is moved with respect to its guide (32, 33) by way of pusher or traction means.

9. The machine according to one or more of the preceding claims, characterized in that said translation and rotation means (19, 20) comprise, for the provision of the rotation, a linear actuator (43, 44) that is interposed between the slider (30, 31) and the corresponding crossmember of the support frame (24, 25).

10. The machine according to one or more of the preceding claims, characterized in that said wall (14) being machined is kept in position on the frames (17, 18) by way of fixed abutments (45, 46), which are fixed at the ends respectively of the crossmembers (24, 25) of the two frames (17, 18), and movable abutments (47, 48).

2. rejects all further requests;

3. orders Appellant to bear the costs of the appeal proceedings;

4. sets the value of the action in appeal at EUR 100,000.

Issued on 20 November 2026.

Ulrike Voß

Digitally signed by Ulrike Voß
Date: 2026.11.20 14:47:51 +01'00'

Ulrike Voß, presiding judge

Bartholomeus Johannes van den Broek

Digitally signed by Bartholomeus Johannes van den Broek
Date: 2026.11.20 16:18:05 +01'00'

Bart van den Broek, legally qualified judge and judge-rapporteur

Nathalie, Jeanne, Danielle SABOTIER

Digitally signed by Nathalie, Jeanne, Danielle SABOTIER
Date: 2026.11.20 14:50:25 +01'00'

Nathalie Sabotier, legally qualified judge

Digitally signed
Geier Nicolai
2026-11-20 15:22:24 +0100

Unified Patent Court
Einheitliches Patentgericht
Juridiction unifiée du brevet

Nicolai Geier, technically qualified judge

Digitally signed
Ledeboer Bernard Christiaan
2026-11-20 16:13:24 +0100

Unified Patent Court
Einheitliches Patentgericht
Juridiction unifiée du brevet

Bernard Ledeboer, technically qualified judge

Anna Monika Ławrynowicz-Drewek

Digitally signed by Anna Monika Ławrynowicz-Drewek
Date: 2026.11.20 16:31:35 +01'00'

For the Registry