Local Division Munich
UPC_CFI_2307/2026

Order
of the Court of First Instance of the Unified Patent Court
Local Division Munich
issued on 19 November 2026

APPLICANT:

OXFORD NANOPORE TECHNOLOGIES PLC
Gosling Building Edmund Halley Road, Oxford Science Park, Oxford,
Oxfordshire, United Kingdom, OX4 4DQ

represented by: Marianne Schaffner, Charlotte Chambon
(Gowling WLG (France) AARPI)

in the following : "Oxford"

RESPONENTS:

MGI TECH GmbH
Volmerstraße 5-9, 12489 Berlin, Germany

in the following: "MGI"

represented by: Dr. Stephan Neuhaus (Allen Overy Shearman Sterling LLP)

supported by: Frits Gerritzen, Caroline Bley, Teresa Limberg, Sara Swinkels and all further registered representatives of Allen Overy Shearman Sterling LLP; Dr. Lasse Weinmann, Dr. Boris Tchitchanov, Dr. Elisabeth Engelhard, Dr. Michael Pfeifer, Dr. Dominik Scheible, Sofie McPherson, PhD and Dr. Daniel Offenbartl-Stiegert (Hoffmann Eitle Patent- und Rechtsanwälte PartmbB)

PATENTS AT ISSUE:
European patents 2 422 198 B1 and 2 715 343 B1

PANEL/DIVISION:
Panel 1a of the Local Division Munich:
Dr. Matthias Zigann (Presiding Judge and JR), Tobias Pichlmaier (LQJ)/Dr Ina Schnurr (LQJ), Rute Lopes (LQJ), Steen Wadskov-Hansen (TQJ)

DECIDING JUDGES:
This order has been issued by the full panel.

LANGUAGE OF THE PROCEEDINGS:
English

SUBJECT OF THE PROCEEDINGS:
RoP 353 (rectification of decisions and orders)

PROCEDURAL BACKGROUND:

1. On 15 September 2026, the Local Division Munich announced a final order in open court in the proceedings on an application for provisional measures. As Legally Qualified Judge Pichlmaier was unavailable on the date of the oral hearing, Legally Qualified Judge Dr Schnurr replaced him and also signed the order.

2. The order is subject to appeal proceedings before the Court of Appeal (Statement of Appeal and Statement of Grounds of Appeal, each dated 30 September 2026; UPC_CoA_173/2026) in which MGI expressed their overall opposition to the order.

3. Paragraph 160 of the order reads as follows:

   Paragraph [0082] of Gershow (AOS_5-B8) discloses tethering a DNA strand to the "surface of a membrane in which the nanopore is formed," which is adjacent to, but not via the nanopore itself. Claim 1 of EP 343 requires a specific technical arrangement: a "detector present in a membrane." This implies two distinct but associated components, such as a protein pore (detector) residing within a lipid bilayer (membrane). Gershow, however, describes a solid-state system where the "nanopore" (detector) is a hole fabricated within a solid substrate (membrane). In this context, the detector and membrane are not distinct entities in the manner claimed; rather, the detector is an integral feature of the membrane. This fundamental difference in technical setup means Gershow does not provide a direct and unambiguous disclosure of the claimed arrangement, a strict requirement for a finding of anticipation. Below is a reproduction of Figs. 17 and 3 of AOS 5-B8 (Gershow). Figure 17 (top) illustrates a solid-state membrane with fabricated holes, where the membrane itself

is the structure in which the nanopore (detector) is formed. Figure 3 (bottom) shows the integrated electronic setup for this solid-state system. These figures illustrate that the detector and membrane are not distinct components as required by claim 1 of EP '343:



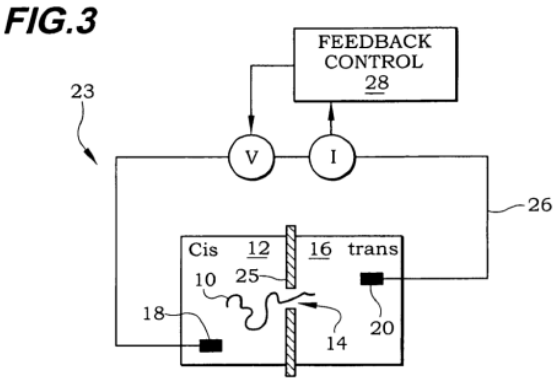

4. With order dated 21 October 2026 the parties had been informed of the court`s intention to rectify this paragraph according to R. 353 RoP and invited them to file observations.

5. Oxford informed the court on 26 October 2026 that they have no comments on the intended rectification. According to Oxford the textual reasoning in paragraph 160 plainly corresponds to the Gershow disclosure, in particular Figure 1A and paragraphs [0025]–[0027], [0036] and [0041]. The error therefore relates to the presentation of the Court's reasoning rather than the reasoning itself. As indicated by the Court, this error and its correction have no impact on the reasoning of the case and the order. Oxford therefore respectfully invites the court to issue the rectifying order as proposed.

6. MGI informed the court on 28 October 2026 that in their view the suggested changes to the order cannot be made under R. 353 RoP. The errors sought to be corrected do in their view neither constitute clerical mistakes nor an obvious slip.

GROUNDS

7. The Court of Appeal has ruled on 2 November 2026 in UPC_CoA_935/2026 that R. 353 RoP permits the court to rectify clerical mistakes, errors in calculation and obvious slips in a

decision or order. The circumstances contemplated by R. 353 RoP presuppose a discrepancy between the decision intended by the court and its material expression. R. 353 RoP does not permit the court, under the guise of rectification, to reconsider or alter a substantive legal assessment contained in the decision or to substitute a different legal conclusion for the one originally expressed.

8. A wrong figure was included in paragraph 160 of the order in relation to the discussion of the Gershow disclosure. Instead of Figure 1A, the order includes Figure 17 from EP 343. As Gershow has no Figure 17, it is clear that the reference to 'Figure 17 of Gershow' and the reproduction of Figure 17 from EP 343 are clerical errors within the meaning of Rule 353 RoP. The intention to refer to and reproduce Figure 1A of Gershow is evident from the context of paragraph 160, as this figure illustrates the solid-state nanopore arrangement discussed in paragraph 160. Thus, the textual reasoning in paragraph 160 corresponds to the Gershow disclosure, particularly Figure 1A and paragraphs [0025]–[0027], [0036] and [0041]. Therefore, there is absolutely no indication that the intention was to refer to Figure 17 of EP 343 rather than the actual Gershow disclosure (i.e. Figure 1A).

9. Figure 17 of EP 343 and Figure 1A of Gershow (reproduced below)

FIG. 1A

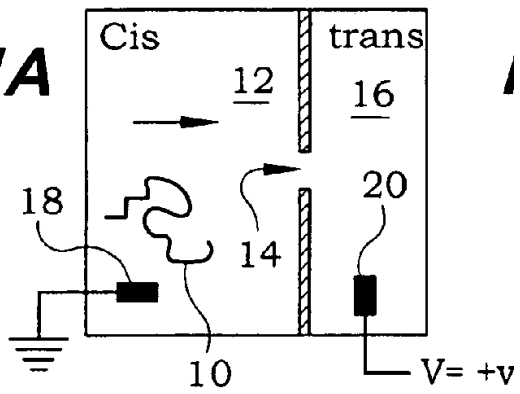

exhibit a recognisable similarity in their schematic presentation, depicting a nanopore-containing membrane or structure, as well as the positioning of an analyte relative to the nanopore. Thus, although the figures illustrate different technical arrangements, perhaps their visual similarity explains why the wrong figure was inadvertently inserted and missed during proofreading.

10. This error therefore relates to the presentation of the court's reasoning rather than the reasoning itself. It can therefore be rectified under R. 353 RoP by replacing the erroneous reference and illustration with Figure 1A of Gershow, without altering the order's substance.

ORDER

Paragraph [160] of the court`s order dated 15 September 2026 is rectified and now reads as follows:

Paragraph [0082] of Gershow (AOS_5-B8) discloses tethering a DNA strand to the "surface of a membrane in which the nanopore is formed," which is adjacent to, but not via the nanopore itself. Claim 1 of EP 343 requires a specific technical arrangement: a "detector present in a membrane." This implies two distinct but associated components, such as a protein pore (detector) residing within a lipid bilayer (membrane). Gershow, however, describes a solid-state system where the "nanopore" (detector) is a hole fabricated within a solid substrate (membrane). In this context, the detector and membrane are not distinct entities in the manner claimed; rather, the detector is an integral feature of the membrane. This fundamental difference in technical setup means Gershow does not provide a direct and unambiguous disclosure of the claimed arrangement, a strict requirement for a finding of anticipation. Below is a reproduction of Figs. 1A and 3 of AOS 5-B8 (Gershow). Figure 1A (top) illustrates a solid-state membrane with fabricated holes, where the membrane itself is the structure in which the nanopore (detector) is formed. Figure 3 (bottom) shows the integrated electronic setup for this solid-state system. These figures illustrate that the detector and membrane are not distinct components as required by claim 1 of EP '343:

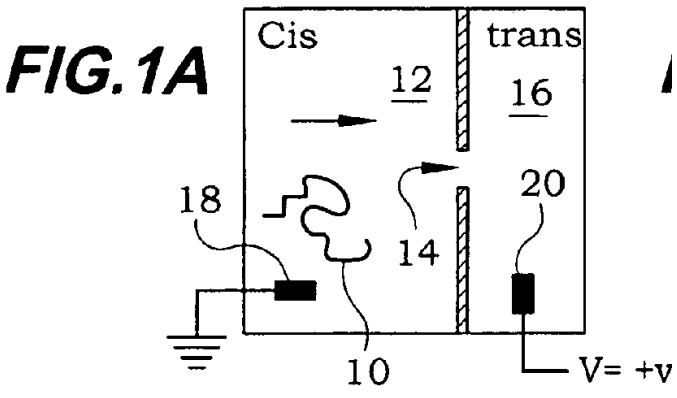

FIG.3

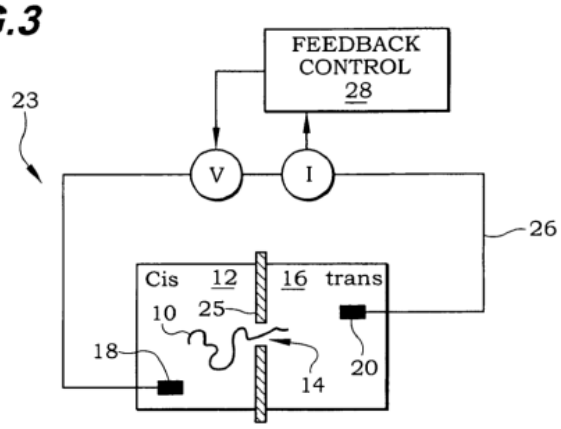

Dr. Zigann Presiding Judge and Judge-Rapporteur	Matthias ZIGANN Digital unterschrieben von Matthias ZIGANN Datum: 2026.11.19 16:10:17 +01'00'
Lopes Legally Qualified Judge	RUTE ALEXANDRA DA SILVA SABINO LOPES Assinado de forma digital por RUTE ALEXANDRA DA SILVA SABINO LOPES Dados: 2026.11.20 12:38:56 Z
Schnurr Legally Qualified Judge	INA SCHNURR Digital unterschrieben von INA SCHNURR Datum: 2026.11.20 08:12:51 +01'00'
Wadskov-Hansen Technically Qualified Judge	Wadskov-Hansen Steen Lyders Lerche Digitalt signeret af Wadskov-Hansen Steen Lyders Lerche Dato: 2026.11.20 07:02:59 +01'00'
For the Deputy-Registrar	Catrin Meyer Digital unterschrieben von Catrin Meyer Datum: 2026.11.20 13:43:46 +01'00'

INSTRUCTIONS TO THE REGISTRY

This order shall be entered on the register. The Court of Appeal (UPC_CoA_173/2026) shall be informed of the rectification.