DeepL machine translation provided by www.veron.com

Unified Patent Court
Einheitliches Patentgericht
Juridiction unifiée du brevet

Düsseldorf local division
UPC_CFI_2788/2026

Order
of the Court of First Instance of the Unified Patent Court
issued on 25 November 2026
concerning EP 3 645 903

HEADNOTE:

In an exceptional individual case, where the risk of irreversible, massive damage in the specific economic sector of the automotive supply industryat a very specific point in time, where the risk of irreversible, massive damage affects both parties equally, whether the injunction is granted or dismissed, leads to the conclusion that, whilst the injunction is issued subject to the provision of security in favour of the respondent, the respondent may nevertheless be provisionally permitted to continue the acts of use subject to the provision of security in favour of the applicant.

KEYWORDS:

Balancing of interests, risk of irreversible and massive damage, provisional measure, provision of security

HEADNOTES:

In an exceptional individual case, where the risk of irreversible massive damage in the specific economic sector of the automotive supply industry affects both parties equally at a very specific point in time, regardless of whether the injunction is granted or dismissed, the balancing of interests leads to the conclusion that, whilst the injunction must be granted subject to the prior provision of security in favour of the defendant, the defendant may nevertheless be permitted to continue the acts of use, subject to the prior provision of security in favour of the applicant.

KEYWORDS:

Balance of interests, irreversible massive damage, interim measures, security

DeepL machine translation provided by www.veron.com

APPLICANT:

Valeo Electrification, represented by its Chairman Christophe Delhovren, 14 avenue des Béguines, 95800 Cergy, France

represented by:	Attorneys-at-law Felix Rödiger, Felix Huber, Bird & Bird LLP, Carl-Theodor-Straße 6, 401213 Düsseldorf, Germany Patent attorneys Nicolas Cardon, Pierre Prigent and Florian Saadi, Valeo Electrification, 14 avenue des Béguines, 95800 Cergy, France
Electronic service address:	felix.roediger@twobirds.com

RESPONDENT:

SEG Automotive Germany GmbH, represented by its managing directors Ferdinando Sorrentivo and Gustavo Henrique Baldussi Ferreira, Lotterbergstraße 30, 70499 Stuttgart, Germany,

represented by:	Luther Rechtsanwaltsgesellschaft mbH, in particular the Dr Detlef Mäder (SSN474), Tobias Schneider (SVZ536), Anna-Schneider-Steig 22, 50678 Cologne, Germany Dehns Germany Partnerschaft mbB, in particular patent attorneys Dr Florian Steinbauer (GWC998) and Andreas Senft (DRY516), Theresienstraße 6–8, 80333 Munich, Germany
electronic service address:	tobias.schneider@luther-lawfirm.com

PATENT AT ISSUE:

EUROPEAN PATENT NO. 3 645 903

Panel/CHAMBER:

2nd Panel of the Düsseldorf local division

JUDGES SEATED:

This order was issued by the presiding judge, Dr Thom, acting as judge-rapporteur, the legally qualified judge Dr Rinken, the legally qualified judge Agergaard and the technically qualified judge Michels.

LANGUAGE OF THE PROCEEDINGS: German

SUBJECT: Application for an order for provisional measures

ORAL HEARING: 12 November 2026

DeepL machine translation provided by www.veron.com

BRIEF SUMMARY OF THE FACTS:

1. The applicant is bringing proceedings against the respondent by way of summary proceedings for infringement of European patent 3 645 903 (Annexes B&B 14, 19, hereinafter: the patent at issue), of which it is the sole proprietor. The previous proprietor, Valeo Equipements Electriques Moteur SAS, was merged into the applicant on 31 May 2024; at that time, the applicant was trading under the name Valeo Systèmes de Contrôle Moteur and, by way of universal succession, also acquired the patent at issue. Subsequently, the applicant changed its company name to that shown in the heading of the order.

2. The patent at issue was filed in French on 27 June 2018, claiming the French priority FR 1755923 of 28 June 2017. The notice of grant of the patent at issue was published on 10 January 2024.

3. On 31 March 2026, the applicant filed an application for limitation by amending the claims. On 10 July 2026, the EPO notified the applicant of its approval of the limitation, including the amended claims and the amended description in the French version. On 23 July 2026, the EPO notified the decision regarding the limitation, and on 19 August 2026, the corresponding B3 document was published in French (Annex B&B 17). The applicant has filed translations of the description and the claims into German as Annexes B&B 15c and B&B 15d. Hereinafter, any cited paragraphs and sections from the claims without reference to a source are taken from these translations of the patent at issue.

4. The patent at issue is in force in the Federal Republic of Germany.

5. The patent at issue relates to a drive assembly for an electric rotary machine in a motor vehicle.

6. Claim 1 is worded as follows:

> *'Drive assembly for a rotating electric machine (100) for a motor vehicle, the drive assembly comprising a rotor shaft (2) extending along a longitudinal axis (X) and a connecting member (4) enabling a connection between the rotor shaft (2) and the torque transmission system, comprising a bore (41) for the passage of the rotor shaft (2), the connecting member (4) being formed by a pulley, the bore (41) comprising a first wall (41a) extending axially and a second cylindrical wall (41b) extending axially in line with the first wall (41a), and the rotor shaft (2) comprising:*
>
> *- a first surface (21) extending axially and cooperating with the first wall (41a) of the bore (41) to centre the connecting member (4) about the rotor shaft (2); and*
>
> *- a second cylindrical surface (22) extending axially and provided with a chamfer*
>
> *having a diameter (A) greater than the diameter (A') of the second wall (41b) of the bore (41), the connecting piece (4) being press-fitted onto the rotor shaft (2)*

by means of knurling,

in that the first surface (21) of the rotor shaft (2) and the first wall (41a) of the bore (41) are cylindrical surfaces having the same diameter (B), in that the connecting piece (4) is mounted at a first end of the rotor shaft (2), in that the first surface (21) of the rotor shaft (2) and the first wall (41a) of the bore (41) are configured to be substantially smooth so as to facilitate the centring of the connecting member (4) on the rotor shaft (2), the drive bore being characterised in that the diameter (B) of the first surface (21) of the rotor shaft (2) is greater than the diameter (A) of the knurling, the knurling being arranged between the first surface (21) and the first end of the rotor shaft (2) and in that the knurling consists of a multitude of projections which carve grooves into the second wall (41b) of the bore (41) when the connecting piece (4) is press-fitted onto the rotor shaft (2)."

7. Claim 1 reads as follows in German translation:

"Drive assembly for a rotating electric machine (100) for a motor vehicle, wherein the drive assembly comprises a rotor shaft (2) extending along a longitudinal axis (X) and a connecting member (4) which provides a connection between the rotor shaft (2) and the torque transmission system, wherein the connecting member (4) has a bore (41) through which the rotor shaft (2) passes, wherein the connecting member (4) is formed by a pulley, wherein the bore (41) has an axially extending first wall (41a) and a cylindrical second wall (41b) extending axially in line with the first wall (41a), the rotor shaft (2) comprising:

- a first, axially extending surface (21) which cooperates with the first wall (41a) of the bore (41) to centre the connecting member (4) around the rotor shaft (2); and

- a second, axially extending cylindrical surface (22) provided with knurling, the diameter (A) of which is greater than the diameter (A') of the second wall (41b) of the bore (41),

whereby the connecting member (4) is connected to the rotor shaft (2) by a positive fit by means of the knurling, wherein the first surface (21) of the rotor shaft (2) and the first wall (41a) of the bore (41) are cylindrical surfaces of the same diameter (B), and the connecting member (4) is fitted to a first end of the rotor shaft (2), wherein the first surface (21) of the rotor shaft (2) and the first wall (41a) of the bore (41) are formed to be substantially smooth in order to facilitate the centring of the connecting part (4) on the rotor shaft (2), the drive device being characterised in that the diameter (B) of the first surface (21) of the rotor shaft (2) is greater than the diameter (A) of the knurling, the knurling being arranged between the first surface (21) and the first end of the rotor shaft (2), and in that the knurling consists of a plurality of projections which score grooves into the second wall (41b) of the bore (41) when the connecting part (4) is press-fitted onto the rotor shaft (2."

8. Claim 5 reads as follows in the original French:

"Rotating electrical machine (100) characterised in that it is an alternator or an alternator-starter and in that it comprises

- *a drive assembly according to any one of claims 1 to 4,*
- *a rotor (6) mounted so as to rotate integrally with the rotor shaft (2),*
- *a stator surrounding the rotor (6), the stator being supported by a housing mounted so as to rotate relative to the rotor shaft (2) by means of a front ball bearing (71) and a rear ball bearing (72) arranged on either side of the rotor (6), and in that the rotor shaft (2) comprises a stop (25) arranged between the rotor (6) and the front ball bearing (71), in that the front ball bearing (71) comprises an inner raceway (71a) in contact with the rotor shaft (2) and an outer raceway (71b), the inner raceway (71a) of the front bearing bearing against the stop (25), and in that the pulley (4) is held clamped against the inner raceway (71a) by means of a clamping nut (8)."*

9. The German translation of claim 5 reads:

"Rotating electrical machine (100), characterised in that it is a generator or a starter-generator and in that it comprises:

- *a drive assembly according to one of claims 1 to 4,*
- *a rotor (6) mounted in a rotationally fixed manner on the rotor shaft (2), and*
- *a stator surrounding the rotor (6), wherein the stator is supported by a housing so as to rotate relative to the rotor shaft (2) by means of a front ball bearing (71) and a rear ball bearing (72) arranged on either side of the rotor (6), and wherein the rotor shaft (2) comprises a stop (25) ordered between the rotor (6) and the front ball bearing (71), the inner raceway (71a) of the front ball bearing (71) bearing against the stop (25), and wherein the front ball bearing (71) comprises an inner raceway (71a) which is in contact with the rotor shaft (2) and an outer raceway (71b), the pulley (4) being clamped against the inner raceway (71a) by means of a clamping nut (8)*."

10. Both parties propose essentially the same analysis of the features of claim 1, which is structured as follows:

1.1. A drive assembly for a rotating electric machine (100) for a motor vehicle, wherein the drive assembly comprises a rotor shaft (2) extending along a longitudinal axis (X) and a connecting member (4) which provides a connection between the rotor shaft (2) and the torque transmission system,
1.2. wherein the connecting member (4) has a bore (41) through which the rotor shaft (2) passes,
1.3. wherein the connecting member (4) is formed by a pulley,
1.4. wherein the bore (41) comprises an axially extending first wall (41a) and a cylindrical second wall (41b) extending axially in line with the first wall (41a), wherein the rotor shaft (2) comprises:

DeepL machine translation provided by www.veron.com

1.5. - a first, axially extending surface (21) which cooperates with the first wall (41a) of the bore (41) to centre the connecting member (4) around the rotor shaft (2); and
1.6. - a second, axially extending cylindrical surface (22) provided with knurling, the diameter (A) of which is greater than the diameter (A') of the second wall (41b) of the bore (41), whereby the connecting part (4) is positively connected to the rotor shaft (2) by means of the knurling,
1.7. wherein the first surface (21) of the rotor shaft (2) and the first wall (41a) of the bore (41) are cylindrical surfaces of the same diameter (B),
1.8. wherein the connecting part (4) is fitted to a first end of the rotor shaft (2),
1.9. wherein the first surface (21) of the rotor shaft (2) and the first wall (41a) of the bore (41) are substantially smooth in order to facilitate the centring of the connecting part (4) on the rotor shaft (2),
1.10. wherein the drive device is characterised in that the diameter (B) of the first surface (21) of the rotor shaft (2) is greater than the diameter (A) of the knurling,
1.11. wherein the knurling is ordered between the first surface (21) and the first end of the rotor shaft (2), and
1.12. that the knurling consists of a plurality of projections which score grooves into the second wall (41b) of the bore (41) when the connecting part (4) is press-fitted onto the rotor shaft (2).

11. Since 2021, the defendant has been manufacturing a starter-generator under the product designation BRM 2.8 and has been market [redacted] Each starter-generator is specifically adapted to the respective engine in which it is installed. The starter-generator, [redacted] is already the subject of a main action before the local court here (CFI_2696/2026).

12. The defendant has offered the BRM 2.8 starter-generato [redacted] to [redacted] in which the claimant is also a party as a direct competitor. The [redacted] The claimant had [redacted] The BRM 2.8 starter-generator, [redacted], constitutes the contested embodiment in the present interim proceedings. With regard to its physical configuration—the patent-infringing characteristics of which are the subject of further dispute between the parties—the contested embodiment does not differ from the version already being marketed [redacted].

13. Below are two images, taken from the application and slightly reduced in size. The image on the left shows the bore of the pulley, whilst the image on the right shows a section of the shaft.



14. Furthermore, the following section shows slightly reduced extracts from the respondent's technical drawings ([redacted] ; the captions have been provided by both parties. The pulley is shown on the left once again, and the rotor shaft on the right.

[redacted]

15. Whilst the summary proceedings were ongoing, the parties submitted the informati [redacted] that [redacted]

16. As the matter proceeds, [redacted]

DeepL machine translation provided by www.veron.com

17. [redacted]nvolves a huge volume of orders, whereby [redacted]

18. The respondent estimates, on a [redacted] The claimant [redacted]

THE PARTIES' APPLICATIONS:

19. Finally, the claimant requests that

I. that the respondent be prohibited from carrying out the following acts in the Federal Republ[redacted] to :

1. drive assemblies for a rotating electric machine for a motor vehicle, namely for belt-driven starter-generators for [redacted]

wherein the drive assembly comprises a rotor shaft extending along a longitudinal axis and a connecting member which provides a connection between the rotor shaft and the torque transmission system, wherein the connectcomponent has a bore through which the rotor shaft passes, the connecting component being formed by a pulley, the bore having an axially extending first wall and a cylindrical second wall extending axially in line with the first wall, the rotor shaft comprising

- a first, axially extending surface which cooperates with the first wall of the bore to centre the connecting member about the rotor shaft; and
- a second, axially extending cylindrical surface provided with a knurled pattern, the diameter of which is greater than the diameter of the second wall of the bore, wherein the connecting member is positively engaged with the rotor shaft by means of the knurled pattern,

wherein the first surface of the rotor shaft and the first wall of the bore are cylindrical surfaces of the same diameter, the connecting member being mounted on the first end of the rotor shaft, wherein the first surface of the rotor shaft and the

DeepL machine translation provided by www.veron.com

first wall of the bore are substantially smooth to facilitate the centring of the connecting part on the rotor shaft, the drive assembly being characterised in that the diameter of the first surface of the rotor shaft is greater than the diameter of the knurling, the knurling being ordered between the first surface and the first end of the rotor shaft, and in that the knurling comprises a plurality of projections which score grooves in the second wall of the bore when the connecting member is press-fitted onto the rotor shaft

(Claim 1)

2. Belt-driven starter generato[redacted] which comprising:

a drive assembly for a rotating electrical machine for a motor vehicle, the drive assembly comprising a rotor shaft extending along a longitudinal axis and a connecting member which provides a connection between the rotor shaft and the torque transmission system, the connecting member having a bore through which the rotor shaft passes, wherein the connecting member is formed by a pulley, the bore having an axially extending first wall and a cylindrical second wall extending axially in line with the first wall, the rotor shaft comprising

- a first, axially extending surface which cooperates with the first wall of the bore to centre the connecting member about the rotor shaft; and
- a second, axially extending cylindrical surface provided with a knurled pattern, the diameter of which is greater than the diameter of the second wall of the bore, wherein the connecting member is positively engaged with the rotor shaft by means of the knurled pattern,

wherein the first surface of the rotor shaft and the first wall of the bore are cylindrical surfaces of the same diameter, the connecting member being mounted on the first end of the rotor shaft, the first surface of the rotor shaft and the first wall of the bore being substantially smooth to facilitate the centring of the connecting member on the rotor shaft, the driveOrder is characterised in that the diameter of the first surface of the rotor shaft is greater than the diameter of the knurling, the knurling being situated between the first surface and the first end of the rotor shaft, and in that the knurling consists of a plurality of projections which score grooves in the second wall of the bore when the connecting part is press-fitted onto the rotor shaft, a rotor which is mounted on the rotor shaft so as to be rotationally fixed, and a stator surrounding the rotor, the stator being supported by a housing so as to rotate relative to the rotor shaft by means of a front ball bearing and a rear ball bearing arranged on either side of the rotor, and wherein the rotor shaft comprises a stop arranged between the rotor and the front ball bearing, the front ball bearing comprising an inner raceway in contact with the rotor shaft and an outer raceway

DeepL machine translation provided by www.veron.com

, the inner raceway of the front ball bearing abuts against the stop, and the pulley is held clamped against the inner raceway by means of a clamping nut.

(Claim 5 in conjunction with Claim 1)

II. For each individual instance of a breach of the orders set out in I., the respondent shall pay the court a recurring administrative fine of up to EUR 250,000.00, but at least (and, where applicable, repeatedly) EUR 10,000 for each breach of the order set out in I. These administrative fines shall be set by the local division of the court upon application by the applicant (Article 63(2) of the UPC Agreement; Rule 354.3 of the RoP).

III. The respondent is ordered to bear, on a provisional basis, a share of the costs amounting to EUR 36,292.00 until a final decision has been made on the claim for reimbursement of costs or an amicable settlement has been reached (Article 69 of the UPC Agreement; Rule 211.1(d) of the RoP).

IV. These orders shall take effect immediately and are enforceable; alternatively, they shall be subject to the applicant providing security in the form of a deposit or a bank guarantee (Article 82(1) of the UPC Agreement).

20. The respondent requests that

I. that the application for provisional measures be dismissed in its entirety and that the applicant be ordered to pay the costs of the proceedings,

II. in the alternative, to permit the respondent to offer the contested embodiment in the tender [redacted] subject to the provision of adequate security of no more than EUR 500,000.00, to be provided within fourteen days of service of the interim order by way of a bank guarantee or payment into the court's account,

III. in the further alternative, to make the validity of a provisional order conditional upon the prior provision of reasonable security, the amount of which is left to the discretion of the court, but which shall not [redacted], and which may be provided by way of a bank guarantee or by payment into the court's account.

FACTUAL AND LEGAL ISSUES:

I. Scope of protection

Feature 1.5

21. The applicant takes the view that feature 1.5 is a functional feature. According to this, the first surface of the rotor shaft need only be suitable for enabling centring in conjunction with the first wall of the bore. No permanent contact between the two surfaces is required. Rather, the centring surface functions like a ‘guide rail’ or a guide area. This follows in particular from paragraph [0029] of the patent at issue. The feature can be fulfilled even if there is a small amount of play between the surfaces. The centring need not be perfect; it is sufficient that the surfaces can help to prevent imbalances.

22. The respondent interprets feature 1.5 as a structural feature. The ‘interaction’ of the surfaces means an actual physical interaction in which the first surface and the first wall are in contact with one another and jointly establish the centring. Only in this way can the axes of rotation of the shaft and the pulley coincide. It is of the view that the centring according to the contested patent is achieved precisely via the first surface and the first wall. ‘Interaction’ presupposes that the surfaces touch, interlock or, at any rate, are in direct contact. If there is a defined gap between the surfaces, the centring as defined by the patent does not take place. The centring must be achieved precisely by these two surfaces.

Feature 1.7

23. The applicant takes the view that ‘the same diameter’ is understood by the person skilled in the art to mean the same nominal diameter. According to their general technical knowledge, manufacturing tolerances are a matter of course. Therefore, two components could have the same diameter even though their measured actual values differ by a few micrometres. The claim does not require a mathematically precise measured diameter; rather, centring can also be achieved with loose or transition fits. The only decisive factor is that the shaft and bore have the same nominal diameter.

24. By contrast, the respondent argues that ‘the same diameter’ means that the centring surfaces must in fact have the same diameters, at least in the sense that their tolerance ranges overlap and allow for identical actual values. The nominal diameter is merely a manufacturing reference value, which the patent at issue does not address on its own in this context. This also follows from the context of features 1.5 and 1.9. Only if the surfaces had practically the same diameter could they come into contact with one another and achieve the centring described in the patent. A clearance fit with a deliberate gap between the shaft and the bore does not fulfil the feature. The patent at issue requires that the diameters match as closely as possible.

DeepL machine translation provided by www.veron.com

Feature 1.9

25. In the applicant's view, feature 1.9 is also a functional feature. The surfaces need only be designed in such a way that they can facilitate centring. It does not follow from this that they must be in complete and permanent contact with one another during operation or after assembly. The smooth surfaces serve the function of allowing the parts to slide easily into one another in the event of contact. The feature is therefore also compatible with a clearance fit.

26. The respondent, on the other hand, interprets feature 1.9 in conjunction with features 1.5 and 1.7. Because the surfaces have the same diameter and must interact, 'essentially smooth' means that the contact surfaces must lie against one another as continuously as possible across their circumference. Only in this way can centring be carried out reliably. The requirement for smooth surfaces specifically confirms that the centring according to the patent is achieved through the contact of these surfaces and not via other components. The surfaces must interact whilst assembled. The smoothness improves the contact and thus the centring. In the case of an interference fit with a permanent gap, the feature would largely lose its technical function.

II. Infringement

. Feature 1.5

27. The applicant submits that, when assembled, the first surface of the rotor shaft of the contested embodiment interacts with the first wall of the bore to centre the pulley on the shaft (feature 1.5).

28. The respondent submits that the contested embodiment does not infringe feature 1.5, as centring is achieved through the interaction of the knurling with the bore, as well as through the contact between the axial end face of the pulley and the axial end face of the bearing, and the clamping by means of a nut, rather than by the first surface and the first wall. A gap is provided between the first surface and the first wall, which allows for limited angular alignment before the end position is fixed by the system comprising the pulley, bearing and shaft.

29. When the pulley is almost in contact with the bearing, it is pressed against the bearing by means of a nut, whereby, in particular, both axial end faces are pressed against one another. These end faces are perpendicular to the axis of rotation and, together with the knurling, ensure that the pulley is centred on the shaft.

Feature 1.7.

30. The applicant submits that both elements (shaft and pulley) of the contested embodiment have a diameter of 16.95 mm.

31. The claimant is of the view that the respondent's technical drawings demonstrate that the manufacturing tolerances of the contested embodiments fall within the nominal diameters. This is sufficient to constitute an infringement. The respondent's measurements also demonstrate that [redacted] this is the case [redacted]. Centring is also achieved in this way, because during installation the first surface and the first wall [redacted] interact even before the knurling reaches the second wall of the bore.

32. Even in the contested embodiment, centring is not achieved by the knurling of the second surface, because material displacement occurs, resulting in a permanent fastening.

33. Furthermore, no centring occurs through the axial contact between the pulley and the axial end of the bearing, nor through the fixing of the pulley by a nut. Thus, numerous tolerances relating to the thread and the surface of the clamping nut must be taken into account, in addition to the flatness and perpendicularity tolerances of the pulley. In practice, centring is hardly conceivable at this late stage, because the grooving of the knurled surface means that the necessary forces can no longer be applied. Furthermore, axial end faces cannot guarantee that the axes are aligned three-dimensionally in line with one another in order to reduce imbalance.

34. According to the respondent's submission, the technical drawings of the contested embodiment show different tolerance ranges. There is always a measurable gap between the diameters, so that an infringement of feature 1.7 is ruled out. The dimensions stated by the claimant are incorrect.

35. The technical drawing of the pulley (Annex L&D 4d) indicates the dimension of [redacted] for the diameter of the first wall ([redacted]. From the technical drawing of the rotor, the dimension for the diameter of the first surface is [redacted] is would result in a difference in the dimensional [redacted]

36. The respondent's measurements (Annexes L&D 4a, L&D 4b, L&D 4c) show the following results: The inner diameters of the pulley [redacted] the outer diameters of the shaft [redacted] For the pulleys and rotor shafts measured, the minimum distance between the diameters of the first surface and the first wall is [redacted] and is even greater than the permissible dimensional tolerances.

37. The respondent takes the view that the calculated ratios are simplistic. [redacted] Furthermore, the components would not [redacted]

DeepL machine translation provided by www.veron.com

[redacted] This type of centring is not required, as the knurling already achieves precise centring. Thanks to the exact alignment achieved by the assembly machine, it is possible for the pulley to be centred on the rotor shaft in the assembled product.

[redacted] ationally symmetrical. The rotational symmetry ensures that the surfaces or areas of the pulley's axial end face that abut the axial end face of the bearing are annular; consequently, no tilting occurs.

Feature 1.9.

38. In the applicant's view, the contested embodiment also infringes feature 1.9, as it has a visibly smooth centring surface that differs from the knurled area (feature 1.9).

III. Validity

39. The respondent is of the view that the patent at issue is, in all probability, not valid. It is rendered non-novel by JP 2011-254602A (Annexes L&D D1, L&D D1T; hereinafter 'D1'). Furthermore, there is a lack of inventive step based on D1, as well as on US 2010013351A1 (Annexes L&D D2, L&D D2T; hereinafter 'D2') and DE 102 37 491 A1 (Annexes L&D D3, L&D D3T; hereinafter 'D3').

IV. Necessity of provisional measures

40. The applicant is of the view that a provisional measure should be issued.

41. Firstly, the matter is urgent because there is a specific risk that the applicant will be excluded from further tenders [redacted] A decision in the main proceedings cannot be awaited, [redacted] would commence immediately with the respondent. This would [redacted] considerably hinder. Therefore, [redacted] effectively ruled out.

DeepL machine translation provided by www.veron.com

42. In offering the contested embodiment [redacted], a completely new act of infringement which could not hav[redacted], against which the applicant must be able to defend itself. It was only had the appli[redacted]g rise to the suspicion that the respondent [redacted] filed the present application with the court within a short[redacted]. It therefore did not act hesitantly in any way.

43. [redacted] The claimant should not be prevented, even in the case of a substantially identical embodiment, from invoking the patent at issue here to defend against the now imminent patent infringement. Furthermore, the law expressly provides that an application for provisional measures may be made even after the main proceedings have commenced.

44. In view of the undisputedly immense damages at stake, the applicant has an overriding interest in the issuance of the measures.

45. Finally, the applicant is not interfering with an established market situation; rather, this concerns a new market. Thus, the infringement of her legitimate interest lies in the fact that no potentially patent-infringing [redacted] course has been set [redacted] g be set.

46. The respondent takes the view that its interests outweigh those of the applicant. It essentially accuses the applicant of using these proceedings as part of a strategy to destroy the respondent economically, having realised that the respondent had gained more market share in recent years.

47. The applicant has been aware of BRM 2.8 for years, or at least ough[redacted] be aware of it. The contested embodiment is identical to BRM 2.8 from the main proceedings. In this respect, the present proceedings fall within the scope of the suspensive effect of Article 33(2) and (3) of the UPC Agreement, provided that the application for an injunction is not regarded as the main issue in the parallel proceedings. In this respect, the applicant's argument is also contradictory when it claims that the product in question is a different one due to insignificant modifications. The applicant has therefore acted hesitantly, meaning that there is no urgency.

48. By contrast, the respondent would suffer significant, irreparable damage if it were prohibited from offering the contested embodiment in the course of th[redacted]. This would entail irreparable structural damage, including a loss of reputation for the respondent, particularly [redacted]

DeepL machine translation provided by www.veron.com

but also on the wider market. The fact that an injunction were set aside would be perceived as less significant than a withdrawal from [redacted]

49. For the parties' full submissions, reference is made to the pleadings and annexes filed with the court, as well as to the minutes of the oral hearing.

LEGAL ASSESSMENT:

50. The admissible application for an order for provisional measures is also successful on the merits.

51. In the case to be decided here, it is more likely than not that the patent at issue has been infringed, and it is also more likely than not that it is valid. As this is an exceptional individual case involving a high risk of irreversible, massive damage in a specific economic sector, the balancing of interests leads, on the one hand, to the applicant being required to provide security for enforcement, whilst, on the other hand, the respondent is granted the opportunity to avert the provisional measure issued against it by paying an estimated sum for damages. This potential sum for damages secures the applicant only in the event of continued use of the invention covered by the contested patent in the [redacted] until the decision at first instance in the main proceedings.

A. Admissibility of the application for provisional measures

52. The application for an order for a provisional measure is admissible.

I. Jurisdiction

53. The Düsseldorf local division has jurisdiction in any event pursuant to Article 32(1)(c) and Article 33(1)(a) of the UPC Agreement. The contested embodiment is offered for sale within the territory of the Federal Republic of Germany.

II. Specificity of the application

54. There are no concerns regarding the specificity of the most recent application. It is apparent from the application and the grounds that these proceedings relate solely to the features of the contested embodiment which are [redacted] or will be.

B. Merits of the application for provisional measures

55. Rule 211.2 of the RoP, read in conjunction with Article 62(4) of the UPC Agreement, provides that the court may require the applicant seeking the grant of provisional measures to produce appropriate evidence to convince the court with sufficient certainty

DeepL machine translation provided by www.veron.com

that the applicant is entitled to institute proceedings under Article 47 of the UPC Agreement, that the patent is valid, and that his right is being infringed or that such an infringement is imminent. Such a sufficient degree of certainty requires that the court considers it at least more likely than not that the applicant is entitled to institute proceedings and that the patent is being infringed. A sufficient degree of certainty is lacking if, after weighing up the probabilities, the court considers the invalidity of the patent to be more likely than its validity (UPC_CoA_335/2023, order of 26 February 2024, p. 27 – NanoString v 10x Genomics).

56. The court is of the view that it is probable that the patent at issue is being infringed and that the invalidity of the patent at issue is, in any event, no more probable than its validity.

I. Determination of the scope of protection of the patent at issue.

57. The scope of protection must be determined according to the same legal criteria for both the infringement and validity assessments.

a) Relevant person skilled in the art

58. The court is satisfied that the person skilled in the art is a mechanical engineer with experience in the design and manufacture of rotating machines and torque transmission mechanisms. She has an industrial background, routinely works with technical drawings and is thoroughly familiar with the relevant ISO standards.

b) Principles of interpretation

59. Pursuant to Article 69 EPC, read in conjunction with the Protocol on its interpretation, the patent claim is not merely the starting point but the decisive basis for determining the scope of protection of a European patent. The interpretation of a patent claim does not depend solely on its exact wording in the linguistic sense. Rather, the description and the drawings must always be taken into account as aids to the interpretation of the patent claim and should not be used merely to resolve any ambiguities in the patent claim. However, this does not mean that the patent claim serves merely as a guideline and that its subject-matter also extends to what, following an examination of the description and the drawings, appears to be the patent proprietor’s claim for protection. In applying these principles, appropriate protection for the patent proprietor should be combined with sufficient legal certainty for third parties. The patent claim must be interpreted from the perspective of a person skilled in the art (UPC_CoA_335/2023, Order of 26 February 2024, Headnote 2 and p. 26 et seq. – 10x Genomics v Nanostring; UPC_CoA_1/2024, Order of 13 May 2024, para. 26 – VusionGroup v Hanshow; UPC_CoA_182/2024, Order of 25 September 2024, para. 82 – Mammut v Ortovox).

c) Subject-matter of the patent at issue

60. The invention relates to the field of rotating electrical machines, such as generators or starter-generators, which are installed in motor vehicles powered by internal combustion engines (paragraph [0001]). The function of the generator is

to convert mechanical energy originating from the engine into electrical energy, thereby supplying power to a vehicle battery or the vehicle's electrical system (paragraph [0003]).

61. Specifically, the invention relates to a drive arrangement for such machines. This comprises a rotor shaft and a connecting member, wherein the connecting member provides a connection between the shaft and a torque transmission system (see paragraph [0002]).

62. The generator is a rotating electrical machine with a shaft on which a pulley is mounted. This is connected via a belt to a further pulley mounted on the engine's crankshaft, so that the belt can transmit the rotational movement of the engine to the generator's shaft (see paragraph [0004]).

63. In paragraph [0005], the patent at issue discusses known solutions for securing the pulley to the shaft, specifically addressing securing by means of a clamping nut. According to the description in the patent at issue, such a securing method may not be sufficient to create a firm connection.

64. The patent at issue sets itself the task of improving the rotational securing of the pulley on the shaft (paragraph [0006]). The patent at issue also objectively solves this task with the features of claim 1, reference being made to the breakdown of features already set out. The use of knurling (features 1.6, 1.10–1.12) improves the resistance to rotation because, due to its three-dimensional configuration, it enables a force-fit connection between the pulley and the rotor shaft.

65. In view of the dispute between the parties, it is necessary to interpret various features, whereby the interpretation is identical for both the question of infringement and the question of the validity of the patent. Claim 5 is a dependent claim which the applicant asserts only by reference to claim 1. The features in dispute between the parties, however, relate exclusively to claim 1, so that these considerations apply equally to claim 5.

d) Feature 1.3

66. It is undisputed that a person skilled in the art understands feature 1.3 to mean that a pulley is a disc or wheel with an outer surface which enables interaction with a belt for the purpose of torque transmission. It should be added that components with a cylindrical outer surface may also function as a pulley, subject to the proviso that, when interacting with a belt in normal use, they must be capable of transmitting torque.

e) Feature 1.5

67. According to feature 1.5, the first surface of the rotor shaft must cooperate with the first wall of the bore in the pulley (connecting part) in order to centre the pulley on the shaft.

68. The person skilled in the art will recognise from the wording of the claim that the surfaces of the shaft and pulley components mentioned must be designed spatially and physically in such a way that they interact for the purpose of centring. Paragraph [0029], for example, refers to the formation of a functional guide area between the shaft and the pulley. The applicant rightly argues that any relevant interaction suitable for fulfilling the purpose of centring is sufficient here. It is irrelevant whether the two elements interact whilst being fitted, i.e. during assembly, and/or only once they are in the installed state. This is also supported by paragraph [0027], which states
'when fitting the pulley […]'. The description of the embodiment confirms the broad wording of the claim in this respect, particularly as it represents the only embodiment for this claim feature. Since the mere suitability for centring is sufficient, the exact extent of the contribution made by the elements mentioned is not decisive. This means that other components may also be involved in the centring, provided that there is also relevant interaction between the surface of the shaft and the wall of the pulley.

f) Feature 1.7

69. According to the wording of feature 1.7, the first surface of the rotor shaft and the first wall of the bore are cylindrical surfaces having the same diameter.

70. Having heard the parties discuss their differing positions at length during the oral hearing, the Court has concluded that a person skilled in the art would interpret the term 'the same diameter' in feature 1.7 to mean that the relevant components have the same nominal diameter and are capable of providing the centring function of feature 1.5.

71. The person skilled in the art must interpret the term 'the same' diameter, taking the claim as a whole into account ([redacted]) and not considering the features in isolation from one another. Neither the claim nor the rest of the description of the patent at issue provides a specific definition of diameter.

72. According to general technical knowledge, which is undisputed between the parties, the person skilled in the art is aware that, due to manufacturing tolerances, it is not possible to manufacture diameters that are mathematically exactly equal. In this context, the person skilled in the art is aware that it is customary in the relevant technical field to specify elements with a nominal diameter and a tolerance class. Where nominal diameters are the same, the tolerance classes of the shaft and bore result in different fits, namely (depending on the tolerance classes used for the shaft and bore) an oversize fit, a transition fit or a clearance fit.

73. Feature 1.7 represents, for the person skilled in the art, a spatial-geometric specification for the interaction required for centring within the meaning of feature 1.5. This is because the function of having the same diameters is to provide suitable centring. The person skilled in the art therefore regards such configurations as falling within the scope of feature 1.7 if they have the same nominal diameter. In such cases, the diameters of the shaft and bore are identical to such an extent that they can fulfil the purpose associated with the feature, namely suitable centring.

74. The respondent takes the view that, in any event, the person skilled in the art would no longer regard interference fits as falling within the scope of the claim wording, because these do not have measurably identical diameters of the two components, in that the dimensional tolerances are separated by a specific distance from one another.

75. However, this understanding is not reflected anywhere in the patent at issue. The claims are couched in general terms. Throughout the entire patent specification, there are no dimensions, nor any other measurements and/or numerical values. The patent at issue therefore accepts the reference value for the same diameter, provided that the shaft and the pulley are centrally aligned. Paragraph [0010] of the general description mentions ensuring central alignment merely as a further advantage of the invention ('at the same time'). The core of the invention is the improved resistance to rotation achieved by the knurling. Furthermore, it follows from paragraph [0027] that, through the interaction of the surfaces mentioned in the claim for centring, the axis of rotation of the pulley coincides with that of the shaft, so that the pulley exhibits no imbalance. Paragraph [0028] states immediately thereafter that the first surface and the first wall have a cylindrical shape with the same diameter. The patent at issue does not address the various differences in manufacturing tolerances, but accepts these and, consequently, all tolerances falling within the nominal diameter, provided that the function of proper centring is ensured. It is irrelevant to the person skilled in the art whether the tolerances may be tighter or looser in relation to one another. On the basis of the overall structure of the claim and the description, the person skilled in the art will retain this general understanding. The person skilled in the art derives no further indications from the specification of the contested patent to examine the individual manufacturing tolerances in detail.

76. Finally, the interpretation of feature 1.7 put forward by the respondent is also contradicted by the consideration that, in the case of transition fits and clearance fits, specific combinations are conceivable which in fact fall under both types of fit. In the respondent's view, such combinations would fall within the scope of the claim as part of a transition fit, but not as part of a clearance fit.

77. This would be conceivable, for example, in the case of the transition fit 12H7, 12js6 (see Annex L&D 2a, p. 35). This would result in the following values (see Annex L&D 2b, pp. 17 and 37):

Bore diameter:	12.000 mm to 12.018 mm
Shaft diameter:	11.9945 mm to 12.0055 mm

78. If the expert were to compare these with a clearance fit of 12H7 or 12h6 (see Appendix L&D 2a, p. 35), the following values would result (see Appendix L&D 2b, pp. 17 and 36):

Bore diameter:	12.000 mm to 12.018 mm
Shaft diameter:	11.989 mm to 12.000 mm

79. The specific combination of a bore diameter of 12,010 mm and a shaft diameter of 11,997 mm can occur both in a transition fit and

DeepL machine translation provided by www.veron.com

a clearance fit. According to the respondent's interpretation, this specific combination would fulfil feature 1.7 as part of a transition fit, but not as part of a clearance fit. In the Court's view, such a result does not appear appropriate in terms of legal certainty, particularly given the lack of any indication to that effect in the patent at issue.

g) Feature 1.9

80. According to feature 1.9, the first surface and the first wall are formed to be substantially smooth in order to facilitate the centring of the pulley on the rotor shaft. In this context, it is sufficient for the smooth configuration to be suitable for achieving the purpose (facilitating centring). It is not apparent that a complete and uninterrupted contact between them is absolutely necessary for this purpose. Paragraph [0033] states in this regard that, advantageously, the surface has a texture comprising irregularities with dimensions smaller than characteristic dimensions. No examples of optical irregularities or tactile homogeneity are mentioned here. Neither the claim nor the description refers to the length of the surface. The term 'essentially' refers to the degree of smoothness, as paragraph [0033] makes clear. The respondent's argument that the feature would largely lose its technical function in the case of an interference fit cannot be accepted. In view of the above interpretation, the state of installation is also covered, in which an essentially smooth surface facilitates centring.

II. Infringement of Claim 1

81. Claim 1 is likely to be infringed by the contested embodiment. This is undisputed between the parties, except for features 1.5, 1.7 and 1.9. However, it is also more likely than not that the aforementioned features are infringed.

1. Feature 1.5

82. According to the parties' submissions, feature 1.5 is likely to be infringed.

83. The following illustration, displayed at a slightly reduced size, is taken from paragraph 185 of the rejo[redacted] the captions are provided by both parties.



84. According to the above interpretation, it is sufficient for the two components relevant to the centring function to interact.

85. In this context, it is irrelevant whether further components also contribute to the centring function, as claimed by the respondent—for example, the knurling, which interacts with the corresponding wall in the bore of the pulley, and contact between an axial end face of the pulley and an axial end face of the bearing, with the two axial end faces being aligned at right angles to the axis of rotation.

86. The burden of proof regarding the infringement lies initially with the claimant. It has argued that

87. The respondent has contested this and has asserted On the basis of the respondent's submission alone, it does not appear possible to establish beyond a reasonable doubt that the surface of the shaft and the wall of the bore in the contested embodiment do not interact at all. Thus, the respondents have neither specifically explained, with regard to

DeepL machine translation provided by www.veron.com

[redacted] As this concerns the respondent's own product, it is incumbent upon the respondent to comment specifically on the length specifications in its own technical drawings if these are alleged to differ or to be interpreted differently.

88. Furthermore, during the oral hearing, the claimant further by referring to the [redacted]. The respondent has not raised any further substantiated objections to this. She has [redacted] As already explained in the context of the interpretation, the patent at issue does not prescribe any specific extent to which the actual interaction contributes. By no means must this be the case over a specific length of the bore. The fact that [redacted] is precisely what the respondent has not claimed. According to the claimant's submission, which is to be taken as the basis in this respect, it is therefore probable that the axially extending surface of the shaft interacts with the bore to centre the pulley of the contested embodiment.

2. Feature 1.7

89. In view of the interpretation set out here, feature 1.7 is also infringed. The nominal diameter is used for the manufacture of the rotor shaft and pulley [redacted] Since the person skilled in the art focuses on whether the nominal diameters are identical and whether the diameters are suitable for providing the centring function, and since the court considers both to be the case, feature 1.7 is also fulfilled by the contested embodiment.

3. Feature 1.9.

90. Feature 1.9 is also infringed. The smoothness of the surface and the wall is not in dispute. As the claim also covers the state of assembly and does not require continuous contact, the smoothness of both structural surfaces is likewise suitable for facilitating centring.

DeepL machine translation provided by www.veron.com

III. Infringement of claim 5

91. Claim 5, which refers back to claim 1, is also infringed. Reference is made to the above considerations.

IV. Validity

92. Nor is there any greater likelihood against the validity of the patent at issue than in its favour.

1. Novelty of claim 1 relative to D1

93. The patent at issue is novel in relation to D1.

94. In any event, D1 does not disclose feature 1.3 clearly and directly.

95. In challenging the novelty, the respondent appeals in particular to the 'fifth embodiment' of D1, which is shown in Figures 19 to 21 and is discussed from paragraph [0028] of the description onwards; Figure 21 of D1 is reproduced below.

[FIG. 21]

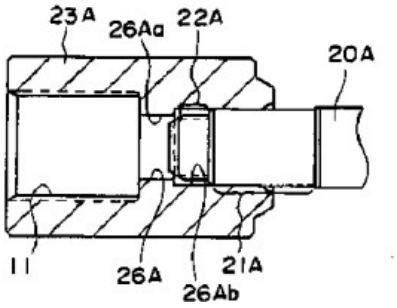

Fig. 21 of D1

96. In general, D1 teaches that a specially designed shaft 20A is connected by means of a hub 23A. The hub 23A is in turn (see Fig. 21 'left') provided with a keyway 11, which is keyed to a (not shown) shaft – see in this regard the description of the first embodiment in paragraph [0011] and paragraph [0028], the last sentence of D1 from which it is apparent that the embodiment shown in Fig. 21 is configured accordingly.

97. With regard to feature 1.3, the respondent argues essentially as follows: Hub 23A has a keyway 11 on the inside, which is designed to be coupled to a splined shaft. The splined shaft is inserted into the hub at its axial end

in order to transmit torque to the power steering. Although the hub 23A has a keyway or keyhole 11, it nevertheless provides a running surface on its outer circumference which is suitable for power transmission or for guiding a belt by friction. The hub 23A is therefore suitable for use as a pulley; it is not necessary to insert a splined shaft for this purpose. In the respondent's view, nothing more is required under claim 1.

98. The respondent's argument is based essentially on the cylindrical outer surface of the hub 23A, onto which a belt can be placed and used for torque transmission. It is therefore a pulley.

99. The court does not consider these arguments to be sound. In particular, the assumption that a belt can be fitted is not convincing. It is not immediately and unambiguously apparent to a person skilled in the art that the outer surface of hub 23A is designed in such a way that, in conjunction with a belt, it can be used to transmit a relevant torque, namely a torque for the intended use.

2. Inventive step with regard to claim 1

100. Based on the examination criteria of the Court of Appeal set out in the Meril v Edwards decision (CoA_464/2024, decision of 25 November 2025), the technical teaching of the patent at issue is also inventive.

a) Starting point D2 combined with D1

101. Based on the problem formulated above (see B.I.c)), D2 represents a realistic starting point. In summary, D2 discloses a rotating electric machine as shown in Fig. 1 of D2. This figure (with the relevant reference symbols highlighted) is reproduced below.

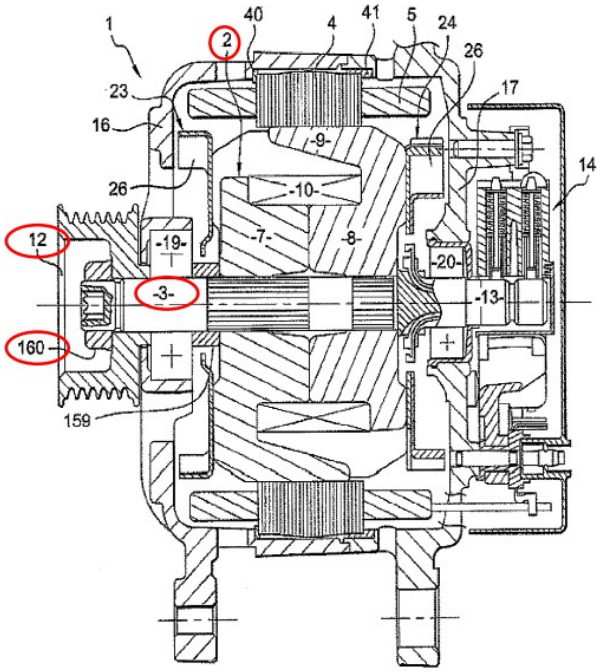

Fig. 1

102. In particular, a rotor 2 can be seen, which is mounted on a shaft 3. The shaft 3 is mounted on a pulley 12, these elements being connected to one another by means of a nut 160. It is undisputed between the parties that D2 anticipates features 1.1, 1.2, 1.3 and 1.8, but not features 1.4, 1.5,
1.6, 1.10, 1.11 and 1.12. The distinguishing features relate to the design of the connection between the shaft and the pulley, i.e. including, amongst other things, the sections with different diameters and the knurling.

103. It is further undisputed between the parties that D1 discloses these distinguishing features – and here too, the Court sees no grounds to depart from this view. The sole point of dispute between the parties is whether it would have been obvious to a person skilled in the art to transfer these features from D1 to D2 and thus arrive at the claimed invention.

104. In the Court's view, the stronger arguments suggest that it would not have been obvious to a person skilled in the art, starting from D2, to transfer the distinguishing features from D1 to D2. This is based, in particular, on the fact that, according to the case law of the Court of Appeal, the person skilled in the art requires a reason which, starting from a realistic starting point, prompts them to modify the solution disclosed in that starting point in the direction of the invention. In the Fujifilm v Kodak decision (UPC_CoA_473/2025 of 13 July 2026), the Court of Appeal specifically pointed out that the person skilled in the art requires a pointer or motivation to combine a starting document with a combination document, whereby this motivation cannot be derived from the combination document itself. The person skilled in the art therefore requires a pointer or motivation to turn to a combination document, whereby this pointer or motivation cannot be derived from the combination document itself. Applying this standard, it is not apparent that the person skilled in the art

DeepL machine translation provided by www.veron.com

would have consulted D1 on the basis of D2. In particular, there is no indication or motivation discernible that would have prompted the person skilled in the art to consult the teaching of D1 on the basis of D2.

105. The respondent's arguments to the contrary are not convincing.

106. The respondent argues, for instance, that D2 and D1 lie within the same or related technical fields. This alone does not constitute sufficient motivation for the person skilled in the art to consider D1 on the basis of D2.

107. Furthermore, whilst the respondent argues that D1 deals with the objective problem and that it would therefore be natural for the person skilled in the art to turn to it, this too is insufficient to justify that the person skilled in the art, starting from D2, actually has a motivation to turn to D1.

108. Furthermore, the respondent merely puts forward arguments intended to rebut the circumstances which, in the applicant's view, militate against combining D2 with D1. However, as the respondent bears the burden of proof and presentation with regard to the likelihood of nullification, it is first for the respondent to set out a specific motivation for the person skilled in the art, starting from D2. This has not been done. On this basis, the Court can therefore only conclude that there is no motivation. Consequently, the person skilled in the art has no reason to modify D2 in the direction of the invention. The invention was therefore not obvious on the basis of D2.

b) Starting point D3 combined with D1

109. In view of the objective problem, D3 is a realistic starting point.

110. The analysis based on D3 relates to embodiment 2 of D3, which is discussed in paragraph 41 of D3 and illustrated in Figures 3A and 3B (see below).

FIG.3A

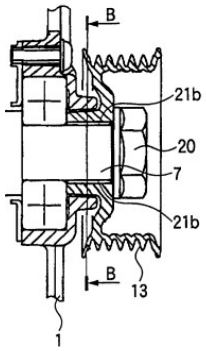

FIG.3B

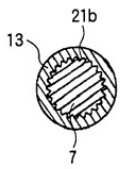

111. D3 relates to a rotating electrical device (see, for example, paragraph [0001] of D3). According to the embodiment shown in Figures 3A and 3B, a rotary shaft 7 is provided, as well as a roller 13 which is connected to a belt (cf. Fig. 19A) and which must therefore be regarded as a pulley. The rotary shaft 7 is connected to the roller 13 via a nut 20 (see paragraph [0036] of D3). Furthermore, strips 21b are provided on the outer

DeepL machine translation provided by www.veron.com

circumferential surface of the rotary shaft 7 and, optionally, on the inner circumferential surface of the roller 13 (see paragraph [0041] of D3).

112. It is undisputed between the parties that D3 discloses features 1.1, 1.2, 1.3 and 1.8 (as does D2). The respondent has further argued that D3 also discloses features 1.6 and 1.12, although the applicant has not specifically contested these assertions. It is also undisputed between the parties that D3 does **not** disclose features 1.4, 1.5, 1.7 and 1.9 to 1.11.

113. In summary, D3 therefore relates to a drive arrangement for a rotating electric machine comprising a rotor shaft and a pulley. Furthermore, the connection between these elements is also provided by knurling, and in this respect this disclosure is closer to the subject-matter of the patent at issue than D2.

114. The Board has doubts as to whether D3 directly and unambiguously discloses feature 1.12. In this regard, the alternative mentioned in the last sentence of paragraph 41 of D3 may be considered as a disclosure: *'[…] a method is provided in which the strip 21b is provided solely in the outer circumferential surface of the engagement section of the rotary shaft 7, and wherein the engagement section of the roller 13, which is formed in the inner diameter that is slightly smaller than the outer diameter of the rotary shaft 7, is pressed in or pressed in under pressure and is in engagement."*

115. It seems doubtful that the person skilled in the art would immediately and unambiguously infer from this that these strips 21b score grooves into the second wall of the bore (of the roller 13) when the connecting part (the roller 13) is press-fitted onto the rotor shaft (7). Whilst this implementation does appear possible, However, it is questionable whether this is necessary, or whether it is not just as possible for the elements to be joined without grooves being cut into the inner wall of the roller 13, for example by deforming the wall of the roller outwards.

116. However, this can be left open, as this implementation would in any case be regarded by the Court as an obvious configuration which generally cannot constitute an inventive step and which is also taught in the combination document D1 (see D1, page 13, line 31 to page 14, line 4).

117. Irrespective of this, the essential difference between D3 and the subject-matter of the invention lies at least in the fact that D3 discloses features 1.4, 1.5, 1.7 and 1.9 to 1.11 are not disclosed. These features relate to the configuration of the various walls/surfaces of the rotor shaft and pulley, which interact when these elements are joined, and in particular to the 'essentially smooth' elements (see feature 1.9), which ensure that the elements are centred relative to one another (see feature 1.5). Once again, it is undisputed between the parties that D1 discloses these distinguishing features.

118. However, here too, in the absence of any reason to do so, it is not apparent that, starting from D3, it would have been obvious to transfer the distinguishing features from D1 to D3. The respondent's arguments in this regard are not convincing. In its preliminary objection, the respondent essentially argued, with regard to a possible combination of D3 with D1, that these documents relate to the same or related fields

or that they deal with a similar task. As with the possible combination of D2 and D1, the Court considers that this does not constitute sufficient motivation to combine D3 with D1. The respondent has not sufficiently discharged its burden of proof, as it has failed to present a positive motivation for the person skilled in the art on the basis of which the person skilled in the art would actually have turned to D1, starting from D3. It is therefore not apparent that claim 1 is obvious.

c) Starting point D1 combined with the other documents

119. Even if the respondent were to additionally use D1 as a starting point, she could not succeed on that ground alone, as she has already made three challenges to the legal position and this would constitute a fourth challenge. By order of 6 August 2026, the judge-rapporteur had stipulated that the arguments regarding the legal position must be limited to three challenges.

3. Inventive step of claim 5

a) Based on D2 in combination with D1

120. Claim 5 is also inventive when based on a combination of D2 and D1.

121. With regard to the distinguishing features, it is undisputed between the parties that these are to be found in feature 5.2 (drive arrangement according to claim 1). With regard to feature 5.2 (drive arrangement according to claim 1), reference may be made to the above considerations. In the Board's view, this alone suffices to show that the subject-matter of claim 5 is not obvious either.

122. The parties further dispute whether feature 5.8 is obvious from a combination of D2 and D1. This feature relates to the fact that the pulley
(4) is held clamped against the inner raceway (71a) [of the front bearing] by means of a clamping nut (8).

123. The clamping nut is disclosed in the prior art document D2 as nut 160 in Fig. 1 of D2 (shown below).

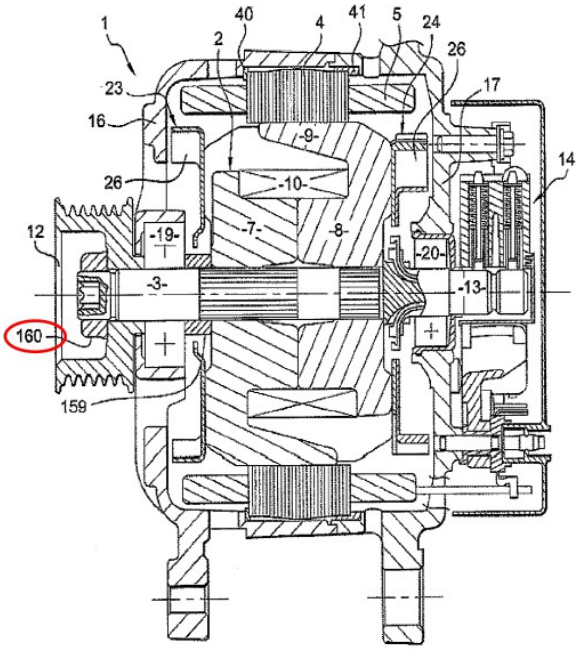

Fig. 1

124. The feature is not shown in the claimed combination document D1 (see Figures 20 and 21 of D1).

[FIG. 20]

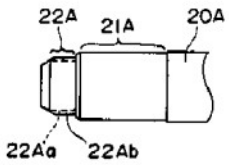

[FIG. 21]

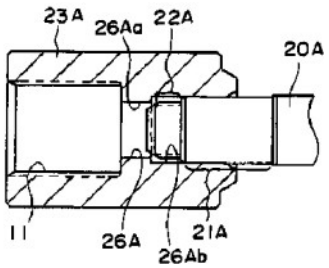

125. The relevant knurled section 22A is ordered near the ‘left’ end of the shaft 20A, and this shaft is not connected to the hub 23A by means of a clamping nut.

DeepL machine translation provided by www.veron.com

126. The respondent submits that the person skilled in the art would have combined D2 with D1. She would have transferred the relevant sections from D1 to D2. With regard to the shaft, these are, in particular, the knurled section 22A and the circular section 21A. At the same time, however, she would not have ordered these sections at the end of the shaft, as in D1. Instead, she would have provided a thread for a nut further towards the edge (i.e. 'on the left' in the figures above) (as in D2).

127. This argument is not convincing. Even if the court were to assume that the person skilled in the art would apply the teaching of D1 to D2, it is not obvious to envisage further modifications to the teaching of D1. In a hypothetical combination of D2 with D1 – which, in the court's view, is not obvious to begin with (see above) – the person skilled in the art would, at most, arrive at an end section designed as in D1 and which therefore does not disclose feature 5.8.

b) Based on D3 in conjunction with D1

128. Claim 5 is inventive when based on D3 in combination with D1.

129. With regard to this line of attack, reference is made to the comments on the combination of D2 with D1. Here, too, it is not obvious to a person skilled in the art to envisage further modifications to the teaching of D1.

V. Necessity of provisional measures and balancing of interests

130. Pursuant to Article 62(2) of the UPC Agreement and Rule 211.3 of the RoP, the court shall, at its discretion, weigh up the interests of the parties against one another, taking into account, in particular, the potential harm that would be caused to one of the parties by the granting or refusal of provisional measures.

131. Under the Rules of Procedure, both temporal and factual circumstances are relevant to determining the necessity of ordering provisional measures. The relevance of temporal circumstances arises from Rule 209.2(b) of the RoP ('Urgency') and, in particular, from Rule 211.4 of the RoP, according to which the court takes into account any undue delay in making an application for provisional measures. The fact that factual circumstances must also be taken into account in the decision on the order for provisional measures follows, for example, from Rule 211.3 of the RoP, according to which, when deciding on the application for provisional measures, particular consideration must be given to the potential harm that may be suffered by the applicant. By contrast, potential harm to the defendant must be taken into account when balancing the interests (UPC_CFI_2/2023 (LD Munich), Order of 19 September 2023, p. 84 – Nanostring v 10x Genomics; UPC_CFI_452/2023 (LD Düsseldorf), order of 9 April 2024, p. 27 – Ortovox v. Mammut).

1. Unreasonable delay

a) Principles

132. When balancing the interests, the court takes into account any undue delay in applying for interim measures pursuant to Rule 211.4 of the RoP in conjunction

DeepL machine translation provided by www.veron.com

with Rule 209.1(b) of the RoP. This is based on the fact that the patent holder's conduct demonstrates that the enforcement of his rights is no longer a matter of urgency for him. In such a situation, there is no need to order provisional measures.

133. The time-sensitive urgency required for the order of provisional measures is lacking only if the infringed party has pursued its claims so negligently and hesitantly that it can objectively be assumed that it has no interest in the swift enforcement of its rights and it therefore does not appear appropriate to order provisional measures (UPC_CFI_347/2024 (LD Düsseldorf), Order of 31 October 2024, p. 42 – Magna v Valeo; see also UPC_CFI 2/2023 (LD Düsseldorf), Order of 19 September 2023 – 10x Genomics v Nanostring; UPC_CFI_452/2024 (LD Düsseldorf), Order of 9 April 2024, p. 27, para. 126 – Ortovox v. Mammut; UPC_CFI_151/2024 (LD Hamburg), Order of 3 June 2024 – Ballinno v. UEFA). The time limit within the meaning of para.
211.4 of the RoP is to be calculated from the date on which the applicant became aware, or ought to have become aware, of the infringement which would have enabled them to lodge a prima facie application for provisional measures pursuant to Rule 206.2 of the RoP. Whether a delay within the meaning of Rule 211.4 of the RoP is unreasonable depends on the circumstances of the individual case (UPC_CoA_182/2024, Order of 25 September 2024, paras. 228 and 232 – Mammut v Ortovox; UPC_CFI_347/2024 (LD Düsseldorf), Order of 31 October 2024, p. 42 – Magna v. Valeo). Ultimately, it must always be assessed whether the applicant's conduct, taken as a whole, justifies the conclusion that the enforcement of their rights is not urgent.

b) Application to the present case

134. In the present case, there is no evidence of undue delay on the part of the applicant, and the application for provisional measures is urgent.

135. Insofar as the respondent invokes a suspensive effect of Article 33(2), third subparagraph, of the UPC Agreement, on the grounds that the main proceedings pending before this panel (CFI_2696/2026), in which the same contested embo[redacted] is not regarded as the main proceedings in relation to the present application for interim relief, this argument fails on two grounds: Firstly, the proceedings in question (CFI_2696/2026) constitute the main proceedings in this case. Secondly, the factual requirements of Article 33(2), third subparagraph, of the UPC Agreement are not met, as the applicant has not brought proceedings before several chambers, but before the same local division.

136. Furthermore, it follows from Rule 206.1 of the RoP that provisional measures may also be applied for after the main proceedings have been instituted. This alternative also covers cases in which the contested embodiment has already been marketed by the respondent for a certain period of time, but where specific, entirely new circumstances of the individual case may now justify a particular urgency. What matters here is the applicant's acquisition of knowledge of precisely those specific circumstances, following which action must not be delayed. Although the product embodiment in question is identical, circumstances have come to light on the basis of which the applicant cannot reasonably be expected to wait for a decision on the main proceedings, as in this case due to the mere passage of time and th[redacted] Once aware of these c[redacted]t must

DeepL machine translation provided by www.veron.com

must not act hesitantly or wait for an unreasonable period of time. She has not done so. Rather, she has pursued her rights expeditiously.

137. It is undisputed between the parties that the contested embodiment does not differ, in terms of the alleged patent-infringing features, from the contested embodiment that was [redacted]. Nor has it been not disputed that BRM 2.8 [redacted] cannot be fitted into a different engine , but must be specially adapted for other engines. This also applies to the [redacted] triggered the urgency. For it is also undisputed between the parties that the manufacturer who [redacted] cannot be easily reversed [redacted] cannot easily be reversed [redacted] the background of the Court of Appeal's case law, which specifically cites immense, irreversible damage as a ground for issuing interim measures, the undisputed extent of the damage resulting from [redacted] a particular circumstance of the individual case which may justify the issuance of an interim measure.

138. In this respect, it is irrelevant whether the applicant was already [redacted]. Rather, what matters [redacted] according [redacted] was offering the contested embodiment. From that point onwards, [redacted] submitted the present a[redacted] a period of less [redacted] filed the present application. There is therefore no evidence of any delay.

2. Objective necessity and balancing of interests

a) Principles

139. The Court must also examine whether the proceedings on the merits can be awaited or whether provisional measures are necessary (UPC_CoA_540/2024, Order of 24 February 2025, para. 19 – Bilitec v Light Guide; UPC_CoA 768/2024, Order of 30 April 2025 – Insulet Corporation v. EOFlow). In this context, the interests of the parties must be weighed up.

140. In exercising its discretion, the degree of probability with which the court is convinced of the existence of the individual circumstances to be taken into account in the balancing exercise is also decisive. The more certain the court is that the patent holder is asserting the infringement of a valid patent, that there is a need to issue an order based on factual and temporal circumstances, and that this is not precluded by any

potential damage to the opposing party or other legitimate objections do not stand in the way, the more justified the issuance of an injunction is. Conversely, the more there are relevant uncertainties regarding individual circumstances relevant to the balancing of interests, which undermine the court's conviction, the more the court will have to consider, as a less severe measure, either permitting the continuation of the alleged infringement subject to the provision of security, or dismissing the application (UPC_CFI_2/2023 (LD Munich), Order of 19 September 2023, p. 98 – Nanostring v 10x Genomics; UPC_CFI_452/2023 (LD Düsseldorf), Order of 9 April 2024, p. 30 – Ortovox v Mammut).

141. Provisional measures are required, for example, where a delay would cause the patent holder irreparable harm. However, such damage is not a necessary prerequisite for the granting of provisional measures (UPC_CoA_182/2024, order of 25 September 2024, para. 237 – Mammut v. Ortovox; UPC_CoA_540/2024, Order of 24 February 2025 – Biolitec v Light Guide, para. 21; UPC_CoA 768/2024, Order of 30 April 2025, para. 103 – Insulet Corporation v EOFlow).

142. The need for provisional measures may also arise from the fact that there is direct competition between the contested embodiment and the patent holder's product (UPC_CoA_540/2024, Order of 24 February 2025, para. 26 – Biolitec v Light Guide). In such cases, provisional measures may be justified if they are necessary to maintain the status quo that existed prior to the alleged infringement until a decision is reached on the merits (UPC_CoA_182/2024, Order of 25 September 2024, para. 238 – Mammut v. Orto-vox; UPC_CoA_540/2024, Order of 24 February 2025, para. 28 – Biolitec v Light Guide).

b) Application to the present case

143. In this exceptional individual case, where the risk of irreversible, massive damage in the specific economic sector of the automotive supply industry affects both parties equally at a very specific point in time, regardless of whether the injunction is granted or dismissed, the balancing of interests leads to the conclusion that, whilst the injunction must be issued subject to the prior provision of security in favour of the respondent, the respondent may nevertheless be permitted to continue the acts of use, subject to the prior provision of security in favour of the applicant.

144. In detail:

145. The first factor militating against the issuance of the injunction is the fact that the applicant, given the essentially undisputed timeframes involved, [redacted] cannot wait for a decision on the merits of the case, which would not be issued for at least a year. In this respect, the applicant has credibly argued that the specific characteristics of the automotive supply industry mean that, in this particular case,

DeepL machine translation provided by www.veron.com

that [redacted]. Replacing the respondent's product after an issued judgment on the merits is, in practice, not feasible due to the specific developments and adaptations of the contested designs to the car manufacturer's specific engines. The enforcement of the issued judgment on the merits, [redacted] would in practice not result in the respondent [redacted] would suffer any loss. Although the respondent has argued in this regard that enforcement may also occur in the automotive industry, it has not, in the final analysis, specifically contested this assertion. The [redacted] The fact [redacted] it is undisputed that a product infringing the patent would cause immense damage to the claimant.

146. This particular case is exceptional simply because such a scenario does not normally arise. As the claimant is familiar with the respondent's contested embodiment from the main proceedings, it was able to [redacted] take action at such an early [redacted]

147. In addition to this the fact that to conviction [redacted] described this using the terms 'either/or situation' and 'one-on-one competitive situation'. The respondent has [redacted] tement of cla[redacted]

[redacted] In this respect, there is more to suggest that the parties in this case have the best prospects [redacted].

148. However, this also means that an injunction against the respondent, which would subsequently be set aside in proceedings on the merits, would give rise to exactly the same irreversible situation, with immense damage to the respondent. In the context of weighing up the respective interests, the likelihood of infringement and the validity of the right must also be taken into account. In the present case, in the Court's view, there is no overwhelming likelihood of infringement or of the right being valid. The course and outcome of the oral hearing already demonstrate, with regard to interpretation, that there are several entirely reasonable views. Nor can it be ruled out, with regard to the infringement, that the respondent is capable of presenting a more detailed case in the main proceedings, particularly in relation to feature 1.5. Finally, the state of the art also appears to be rather narrow, so that here too it cannot be ruled out from the outset that, given more time for research, the respondent might find a more promising prior art reference, on the basis of which the decision on the validity of the patent would have to be reconsidered.

149. The court therefore finds itself dealing with a case in which an injunction would cause the same irreversible damage to the respondent as to the applicant, should it transpire in the main proceedings that the decision issued following a summary examination in the proceedings for interim relief is to be set aside.

150. If, against the background of preserving the status quo of interim relief, one considers the consequences of the claimant failing to obtain an injunction, the following conclusion arises: should an injunction not be granted, the claimant faces the risk, in the present competitive situation, that she [redacted] respondent [redacted] be more likely than not to infringe the respondent's patent. might just as wel However, it is likely In any event, it is neither apparent nor has it been argued why the claimant s that [redacted]

151. In this particular case, where an injunction would create a situation for both parties that is irreversible and has massive economic consequences, the court is of the view that the applicant's interest in excluding a competitor who is likely to enter the market with a patent-infringing product must, exceptionally, be accorded less weight [redacted]

DeepL machine translation provided by www.veron.com

. In view of the irreversibility of the [redacted] e for the respondent, the provision of security by the applicant alone does not appear sufficient to mitigate the effects of a different decision on the merits. The
appropriate outcome in this case is to continue to allow the respondent to proceed, [redacted] provided that she provides the applicant with security in advance for her potential damages
in advance in the event that she [redacted] and this prohibition order is upheld in the main proceedings.

152. Under Rule 211 of the RoP, the court has discretion in issuing such measures. Rule 211.5 of the RoP provides for the provision of adequate security to be borne solely by the applicant. However, the court adopts the same legal principle here. The applicant also has a right to security, should an injunction subject to security be issued in summary proceedings and it appears too drastic for the defendant, but it transpires in the main proceedings that the defendant has acquired a legal position which, on the basis of the now confirmed patent infringement, is unlawful and which, in practice, can no longer be remedied by the measures of a main proceedings order. The defendant provides security because, despite the probable infringement of a patent that is likely to be valid, they are permitted to continue using the invention for the time being.

153. In this exceptional case concerning the specific [redacted] in the automotive supply industry, the order for mutual security appears to be the milder measure that is sufficient, but also necessary, to preserve the status quo [redacted] until a decision is reached at first instance on the merits of the case.
This authorisation ceases upon the issuance of the first-instance decision on the merits.

c) Amount of the security to be provided by the respondent

154. The security must reflect the compensation to be paid by the respondent to the applicant. As this is summary proceedings, the court can, by its very nature, only make a rough estimate here.

155. The [redacted]

DeepL machine translation provided by www.veron.com

156. As it is not possible to predict for [redacted]
It seems justified to calculate an average figure for the estimate of the compensation. It also seems appropriate to [redacted]. In this respect, the respondent's potential profits from the infringement amount to app[redacted]. Drawing an analogy with a licence, the court estimates a licence rate for the purposes of this a[redacted]. In this respect, the court has sufficient grounds to estimate the total damages. On this basis, the court considers a security deposit of [redacted] to be appropriate and proportionate.

157. Even though, according to the wording of Rule 211.5 of the RoP, a decision by the Court on the form of security is provided for, it appears appropriate – as has already been decided by the local divisions in the main proceedings – to leave it to the respondent to decide whether to provide the security to the applicant by way of a deposit or a bank guarantee.

158. Provided that the respondent, prior to the issuance of the first-instance decision in the main proceed[redacted] an application may be made for the security to be released (R. 352.2 of the RoP).

VI. Legal consequences

159. The defendant offers the contested embodiment [redacted] (Article 25(a) of the UPC Agreement). Acts of offering include [redacted] This is to be prohibited in respect of the respondent (Article 62(1), second alternative, UPC Agreement), whereby in this case [redacted] the amount ordered. A prohibition order is in place, and the authorisation subject to the provision of security suspends its enforcement despite its validity. In this respect, the present case differs from Article 62(1), third alternative, of the UPC Agreement, in which no injunction is issued at all, but rather authorisation to continue the infringement is granted subject to the provision of security.

VI. Enforcement measures

160. As is apparent from the order, the measure was to be limited; the proposed amount of the enforcement order appears reasonable. Furthermore, it is not apparent why a minimum sum should be set at this stage.

4. Provisional reimbursement of costs

161. Pursuant to Article 69 of the UPC Agreement in conjunction with Rule 211.1(d) of the RoP, the applicant may request provisional reimbursement of costs.

162. This enables the successful party to claim back, on a provisional basis, at least part of the costs incurred from the unsuccessful party until the subsequent separate proceedings for the determination of costs pursuant to Rule 150 et seq. RoP have commenced and been finally concluded (see UPC_CoA_317/2025, Order of 28 November 2025, Barco v Yealink, para. 96 et seq.).

163. The amount of the costs is below 50 per cent of the relevant upper limit for recoverable costs deemed reasonable by the Court of Appeal and is therefore not open to challenge.

5. Costs

164. A decision on costs must be made. This follows the guidelines of the appeal court, according to which a decision on costs is to be issued in proceedings for provisional measures conducted inter partes (UPC_CoA_523/2024, Order of 3 March 2025, para. 117 – Sumi Agro v Syngenta). Pursuant to Article 69(1) of the UPC Agreement, the reasonable and proportionate costs of the proceedings and other expenses incurred by the successful party are, in principle, to be borne by the unsuccessful party, unless equity dictates otherwise.

165. Consequently, in the present case, the respondent is liable to bear the costs, as it has been unsuccessful and the authorisation to avert the prohibition merely mitigates the consequences of the prohibition order due to the exceptional circumstances.

166. The parties have agreed on the amount of the reimbursement of costs up to a sum of EUR 240,000.00 and have waived any subsequent objections thereto.

6. Security to be provided by the applicant

167. Pursuant to Rule 211.5 of the RoP, the court may require the provision of adequate security to ensure that the respondent is adequately compensated for the damage she is likely to suffer should the court set aside the order for interim measures. In view of the above considerations, this is also appropriate in the present case. Should the respondent fail to provide security and thereby allow the injunction to be issued against her, her potential losses must in any event be safeguarded. The injunction shall therefore only become effective and enforceable once the applicant has provided the security specified in the Order.

168. The amount of the security is identical to the security [redacted] Even though the respondent has not disputed that it may already be working on a so-called ‘design-around’, it is not apparent why this should lead to a reduction in the security to be provided by the applicant.

7. Value of the claim

DeepL machine translation provided by www.veron.com

169. In view of the applicant's interests at stake, the value in dispute also had to be adjusted. [redacted]

ORDER:

I. The respondent is prohibited from

in the Federal Republic of Germany to [redacted] offer the following

1.
Drive assemblies for a rotating electric machine for a motor vehicle, namely for [redacted]

wherein the drive assembly comprises a rotor shaft extending along a longitudinal axis and a connecting member which provides a connection between the rotorshaft and the torque transmission system, wherein the connecting part has a bore through which the rotor shaft passes, wherein the connecting part is formed by a pulley, wherein the bore has a first wall extending axially and a second cylindrical wall extending axially in line with the first wall,

wherein the rotor shaft comprises

- a first, axially extending surface which cooperates with the first wall of the bore to centre the connecting member around the rotor shaft; and
- a second, axially extending cylindrical surface provided with a knurled pattern, the diameter of which is greater than the diameter of the second wall of the bore, the connecting member being connected to the rotor shaft by a positive fit by means of the knurled pattern,

wherein the first surface of the rotor shaft and the first wall of the bore are cylindrical surfaces of the same diameter, wherein the connecting part is fitted to the first end of the rotor shaft, wherein the first surface of the rotor shaft and the first wall of the bore are substantially smooth in order to facilitate the centring of the connecting part on the rotor shaft, wherein the driveOrder is characterised in that the diameter of the first surface of the rotor shaft is greater than the diameter of the knurling, the knurling being situated between the first surface and the first end of the rotor shaft, and in that the knurling consists of a plurality of projections which score grooves in the second wall of the bore when the connecting member is press-fitted onto the rotor shaft;

DeepL machine translation provided by www.veron.com

2.
Belt-driven starter generato[redacted] which comprising:

a drive assembly for a rotating electric machine for a motor vehicle, the drive assembly comprising a rotor shaft extending along a longitudinal axis and a connecting member that provides a connection between the rotor shaft and the torque transmission system, the connecting member having a bore through which the rotor shaft passes, wherein the connecting member is formed by a pulley, the bore having a first wall extending axially and a second cylindrical wall extending axially in line with the first wall,

wherein the rotor shaft comprises

- a first, axially extending surface which cooperates with the first wall of the bore to centre the connecting member around the rotor shaft; and
- a second, axially extending cylindrical surface provided with a knurled pattern, the diameter of which is greater than the diameter of the second wall of the bore, whereby the connecting member is positively engaged with the rotor shaft by means of the knurled pattern,

wherein the first surface of the rotor shaft and the first wall of the bore are cylindrical surfaces of the same diameter, the connecting member being mounted on the first end of the rotor shaft, the first surface of the rotor shaft and the first wall of the bore being substantially smooth to facilitate the centring of the connecting member on the rotor shaft, the driveOrder is characterised in that the diameter of the first surface of the rotor shaft is greater than the diameter of the knurling, the knurling being situated between the first surface and the first end of the rotor shaft, and in that the knurling consists of a plurality of projections which score grooves in the second wall of the bore when the connecting part is press-fitted onto the rotor shaft, a rotor which is mounted on the rotor shaft so as to be rotationally fixed, and a stator surrounding the rotor, the stator being supported by a housing so as to rotate relative to the rotor shaft by means of a front ball bearing and a rear ball bearing arranged on either side of the rotor, and wherein the rotor shaft comprises a stop arranged between the rotor and the front ball bearing, the front ball bearing having an inner raceway in contact with the rotor shaft, and an outer raceway, the inner raceway of the front ball bearing bearing against the stop, and the pulley being held clamped against the inner raceway by means of a clamping nut.

II. For each individual instance of a breach of the orders set out in I.I and I.2, the respondent shall pay a recurring penalty payment of up to EUR

250,000.00 to the court. These penalty payments shall be set by the local chamber of the court upon application by the claimant (Art. 63(2) UPC Agreement; R. 354.3 RoP).

III. The respondent is ordered to bear, on a provisional basis, a share of the costs amounting to EUR 36,292.00 until a final decision has been made on the claim for reimbursement of costs or an amicable settlement has been reached (Article 69 of the UPC Agreement; Rule 211.1(d) of the RoP).

IV. The respondent shall bear the costs of the proceedings.

V. The orders set out in paragraphs I.1, I.2 and III. shall only be effective and enforceable if the claimant has provided security in the form of a deposit or a bank guarantee from a bank authorised in the EU in the amount of [redacted].

VI. The respondent is permitted to supply the drive assemblies referred to in paragraph I.1 and the belt-driven starter-generators r[redacted] until a decision at first instance has been issued on the merits of the case, provided that the respondent has provided security in the amount of [redacted] in the form of a cash deposit or a bank guarantee from a bank authorised in the EU.

VII. The value in dispute in these proceedings is set at [redacted].

Issued in Düsseldorf on 25 November 2026

Presiding Judge Dr Thom	Anna Bérénice Dr THOM Digitally signed by Anna Bérénice Dr THOM Date: 24 November 2026 17:44:19 +01'00'
Legally qualified judge Dr Rinken	Ingo Rinken Digitally signed by Ingo Rinken Date: 24 November 2026 18:19:10 +01'00'

DeepL machine translation provided by www.veron.com

Legally qualified judge Agergaard	Digitally signed Agergaard Peter Juul 24 November 2026 21:58:13 +0100 Unified Patent Court Einheitliches Patentgericht Juridiction unifiée du brevet
Technically qualified judge Michels	Digitally signed Michels Simon Stephan 24 November 2026 18:08:35 +0100 Unified Patent Court Einheitliches Patentgericht Juridiction unifiée du brevet
On behalf of the Deputy-Registrar	Digitally signed Rachida Boudra-Seddiki 25 November 2026 08:07:41 +0100 Unified Patent Court Einheitliches Patentgericht Juridiction unifiée du brevet

Information regarding the appeal:
An aggrieved party may appeal against this order within 15 days of its service (Art. 73(2)(a), 62 UPC Agreement, R. 220.1(c), 224.2(b) of the RoP).

Information on enforcement (Art. 82 UPC Agreement, Art. 37(2) EPGS, R. 118.8, 158.2, 354, 355.4 RoP):
A certified copy of the enforceable decision or enforceable order shall be issued by the Deputy-Registrar on application by the party seeking enforcement, Rule 69 of the Rules of Procedure.